PARTS LIST

MODEL 509

PARTS LIST

MODEL 509

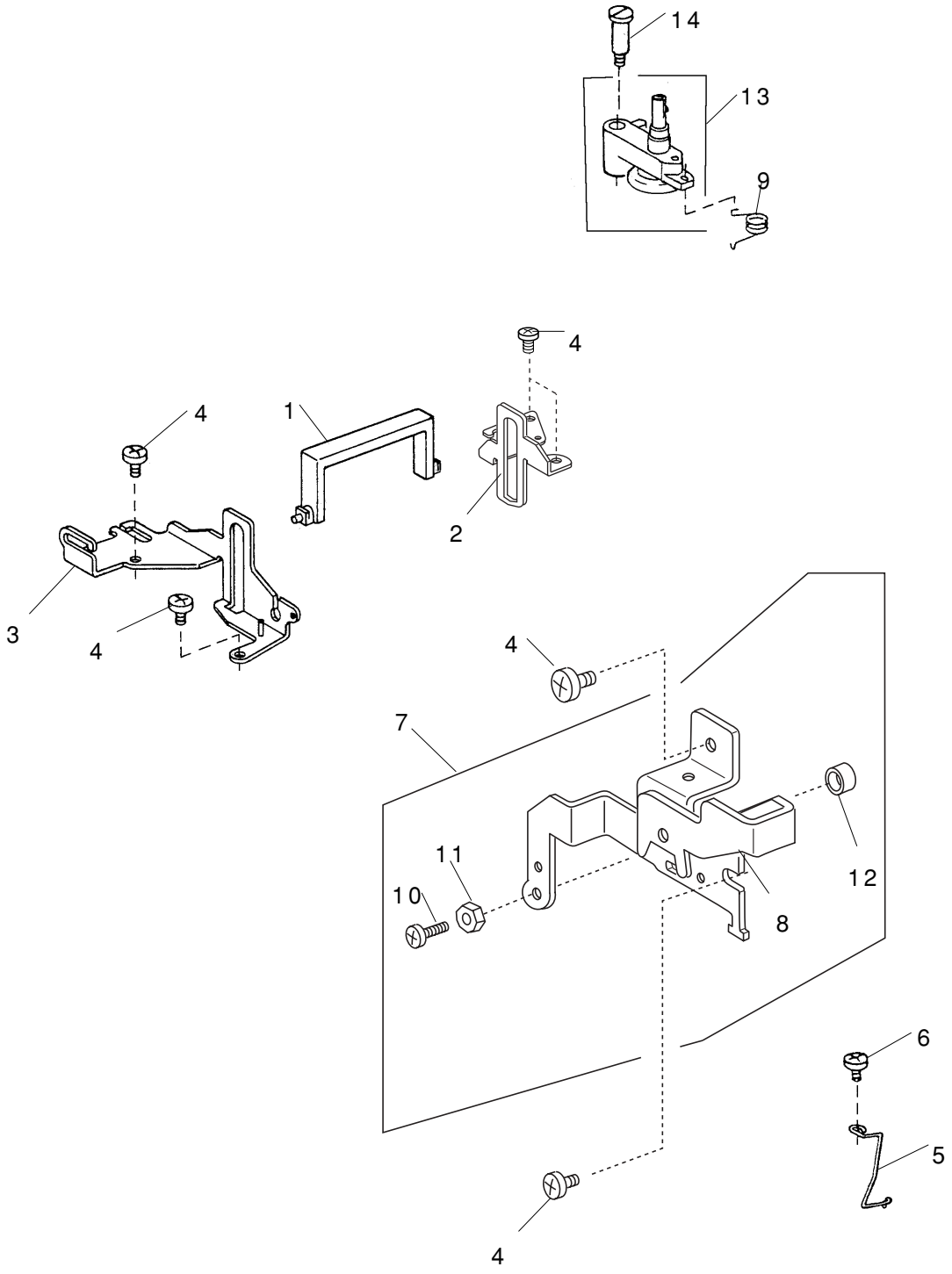

PARTS LIST

MODEL 509

KEY NO.	PART NO.	DESCRIPTION	REMARKS
1	751100000	Carrying handle	
2	507150002	Carrying handle supporter (right)	
3	751077029	Carrying handle supporter (left)	
4	000081005	Setscrew 4X8	
5	652137006	Arm thread guide	
6	000101404	Setscrew 4X6	
7	507603005	Face plate set plate (unit) (120V)	
	507603108	Face plate set plate (unit) (220-240V)	
8	507006002	Face plate set plate (120V)	
	507006105	Face plate set plate (220-240V)	
9	823119008	Spring	
10	000197706	Setscrew 4X45	
11	000160102	Adjustable lock nut 4	
12	685042005	Supporter stopper	
13	652506000	Bobbin winder (unit)	
14	652093009	Setscrew	

PARTS LIST

MODEL 509

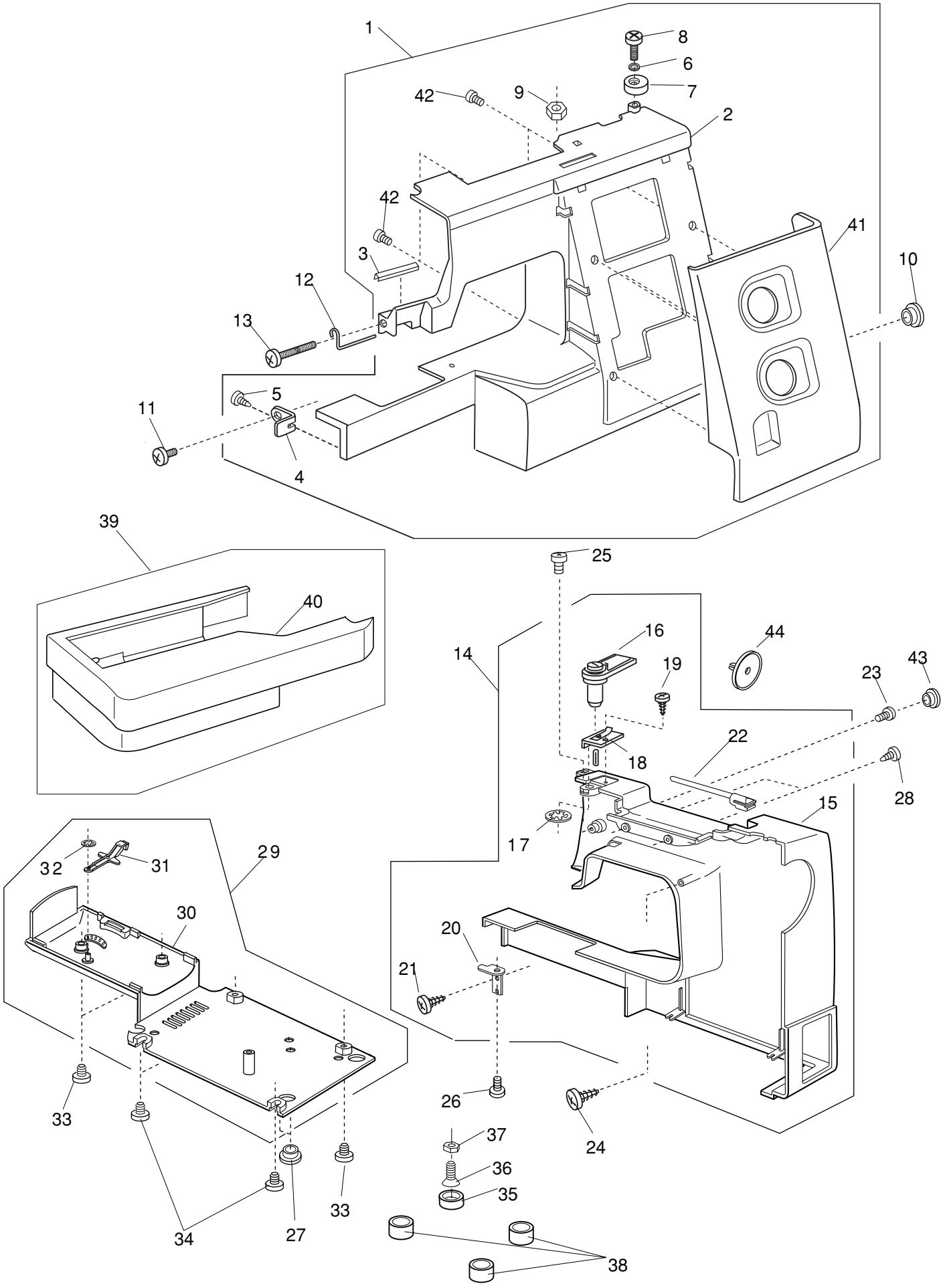

PARTS LIST

MODEL 509

KEY NO.	PART NO.	DESCRIPTION	REMARKS
1	507634407	Front cover (unit)	
2	507110011	Front cover	
3	753125007	Thread guide	
4	827069004	Front cover set plate (lower)	
5	000120203	Setscrew 3X8	
6	000071013	Washer 4	
7	735016307	Bobbin winder stopper	
8	000103107	Setscrew 4X14	
9	000061205	Nut 4-3-7	
10	745033002	Cap	
11	000101404	Setscrew 4X6	
12	753126008	Arm thread guide	
13	000092917	Setscrew 3.5X27	
14	507631002	Rear cover (unit)	
15	507102102	Rear cover	
16	650503702	Thread guide (unit)	
17	000014409	Snap ring CS8	
18	827503005	Top cover thread guide (unit)	
19	000162001	Setscrew 2.6X5	
20	827006003	Rear cover set plate	
21	000161103	Setscrew 3X6	
22	659067005	Additional spool pin	
23	000101817	Setscrew 4X16	
24	000121905	Setscrew 4X12	
25	810220003	Setscrew	
26	000081119	Setscrew 4X6	
27	745033002	Cap	
28	000161310	Setscrew 3X12	
29	507601003	Base cover (unit)	
30	507001007	Base cover	
31	753005000	Drop feed lever	
32	000013903	Snap ring CS5	
33	000101703	Setscrew 4X12	
34	000103509	Setscrew 4X10	
35	735002001	Rubber foot	
36	000097808	Setscrew 5X25	
37	000061412	Nut 5-3-8	
38	647009002	Bed rubber cushion	
39	507637008	Extension table (unit)	
40	507503004	Extension table (unit)	
41	507111148	Panel	
42	000161402	Setscrew 2.3X8	
43	653006101	Cap	
44	822020503	Spool holder (large)	

PARTS LIST

MODEL 509

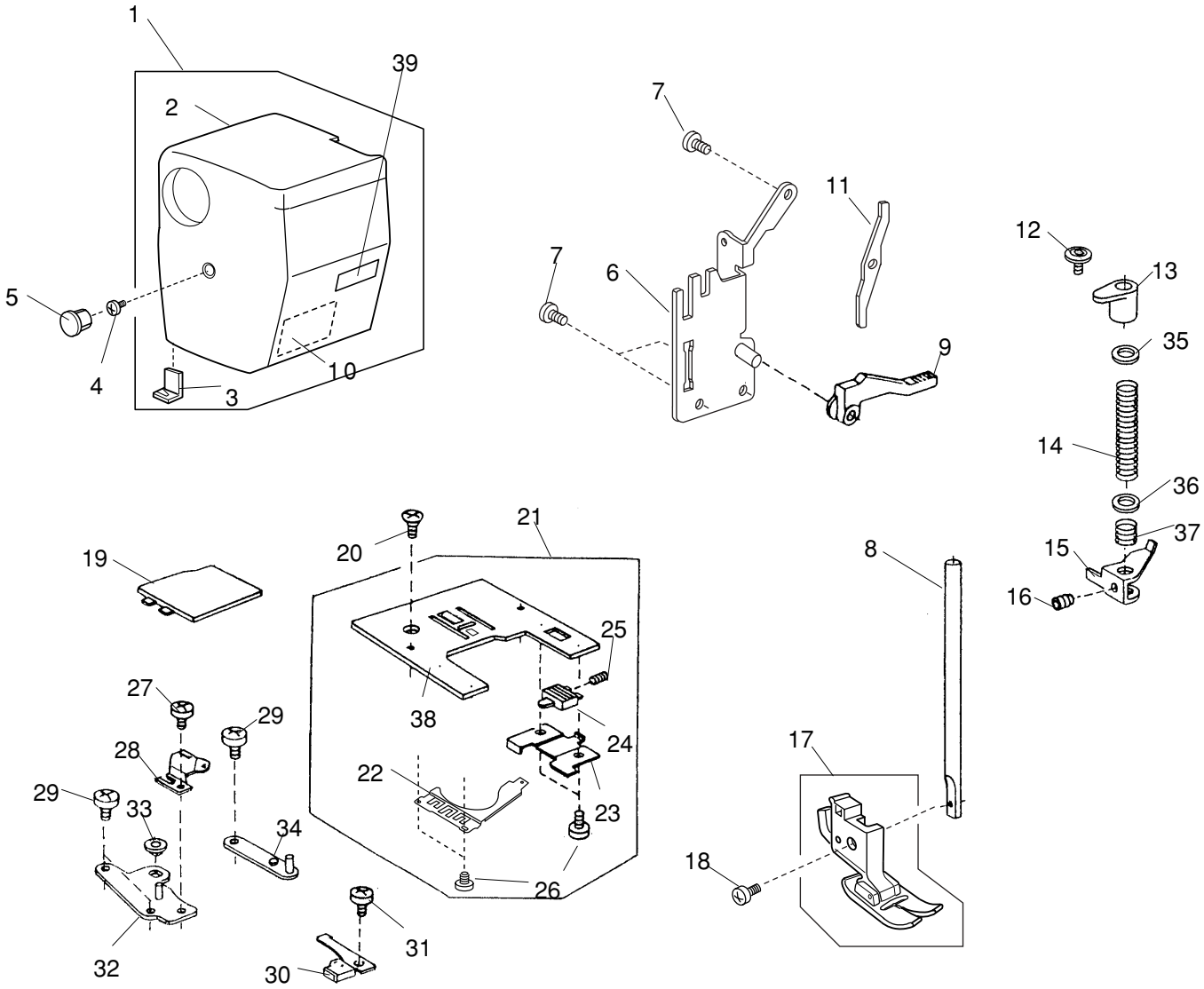

PARTS LIST

MODEL 509

KEY NO.	PART NO.	DESCRIPTION	REMARKS
1	507632003	Face plate (unit) (USA)	
	507632405	Face plate (unit) (Canada)	
	507632209	Face plate (unit) (Australia)	
	507632106	Face plate (unit) (Continental Europe)	
2	507105013	Face plate (USA & Canada)	
	507105219	Face plate (Australia)	
	507105116	Face plate (Continental Europe)	
3	840602006	Thread cutter (unit)	
4	000101703	Setscrew 4X12	
5	653006101	Cap	
6	507156008	Presser bar base plate	
7	000081005	Setscrew 4X8	
8	827021004	Presser bar	
9	735029004	Presser foot lifter	
10	724025006	Reflecting sticker	
11	751142004	Thread tension release lever	
12	000193001	Thin-head setscrew TP 4X6	
13	652104004	Presser bar bushing	
14	826006000	Presser bar spring	
15	735028003	Presser bar supporter	
16	000111500	Hexagonal socket screw 4X8	
17	660508007	Presser foot (unit)	
18	660106001	Setscrew	
19	750036012	Hook cover plate	
20	820390109	Needle plate setscrew	
21	751603400	Needle plate (unit)	
22	832235010	Hook cover plate supporter (left)	
23	825015010	Hook cover plate supporter (right)	
24	825016000	Hook cover plate release button	
25	825017001	Hook cover plate release button spring	
26	820374004	Setscrew 2X2.3	
27	000103808	Setscrew 3X5	
28	822011109	Bobbin holder stopper	
29	000066705	Setscrew 3X8	
30	751502006	Bobbin holder stopper (unit)	
31	810220003	Setscrew	
32	751008007	Needle plate adjusting plate (left)	
33	822314002	Nut	
34	751009008	Needle plate adjusting plate (right)	
35	652201002	Washer	
36	826055004	Washer	
37	826056005	Presser foot support spring	
38	653179003	Needle plate	
39	100517008	Caution sticker (Canada only)	

PARTS LIST

MODEL 509

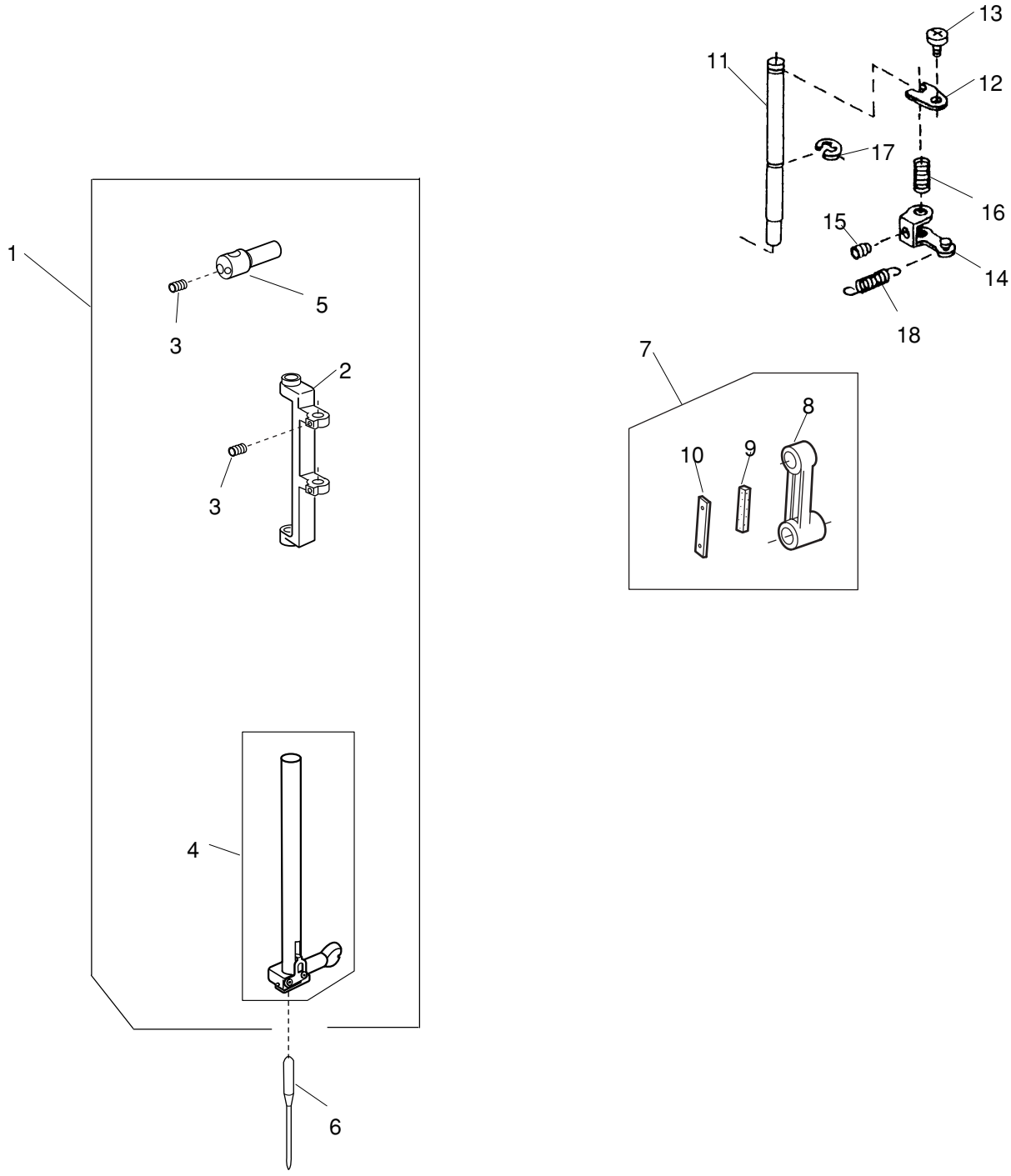

PARTS LIST

MODEL 509

KEY NO.	PART NO.	DESCRIPTION	REMARKS
1	752654007	Needle bar supporter (unit)	
2	650038000	Needle bar supporter	
3	000111201	Hexagonal socket screw 4X4	
4	751630015	Needle bar (unit)	
5	650100004	Needle bar connecting stud	
6	102408089	Needle HA-14	
7	650607006	Needle bar crank rod (unit)	
8	650039001	Needle bar crank rod	
9	650040005	Felt	
10	650041006	Felt holder spring	
11	650033005	Supporter shaft	
12	650034006	Supporter shaft stopper plate	
13	000101404	Setscrew 4X6	
14	650035007	Zigzag width arm	
15	000111108	Hexagonal socket screw 4X6	
16	650036008	Supporter shaft spring	
17	000001609	Snap ring E5	
18	507094007	Needle bar supporter spring	

PARTS LIST

MODEL 509

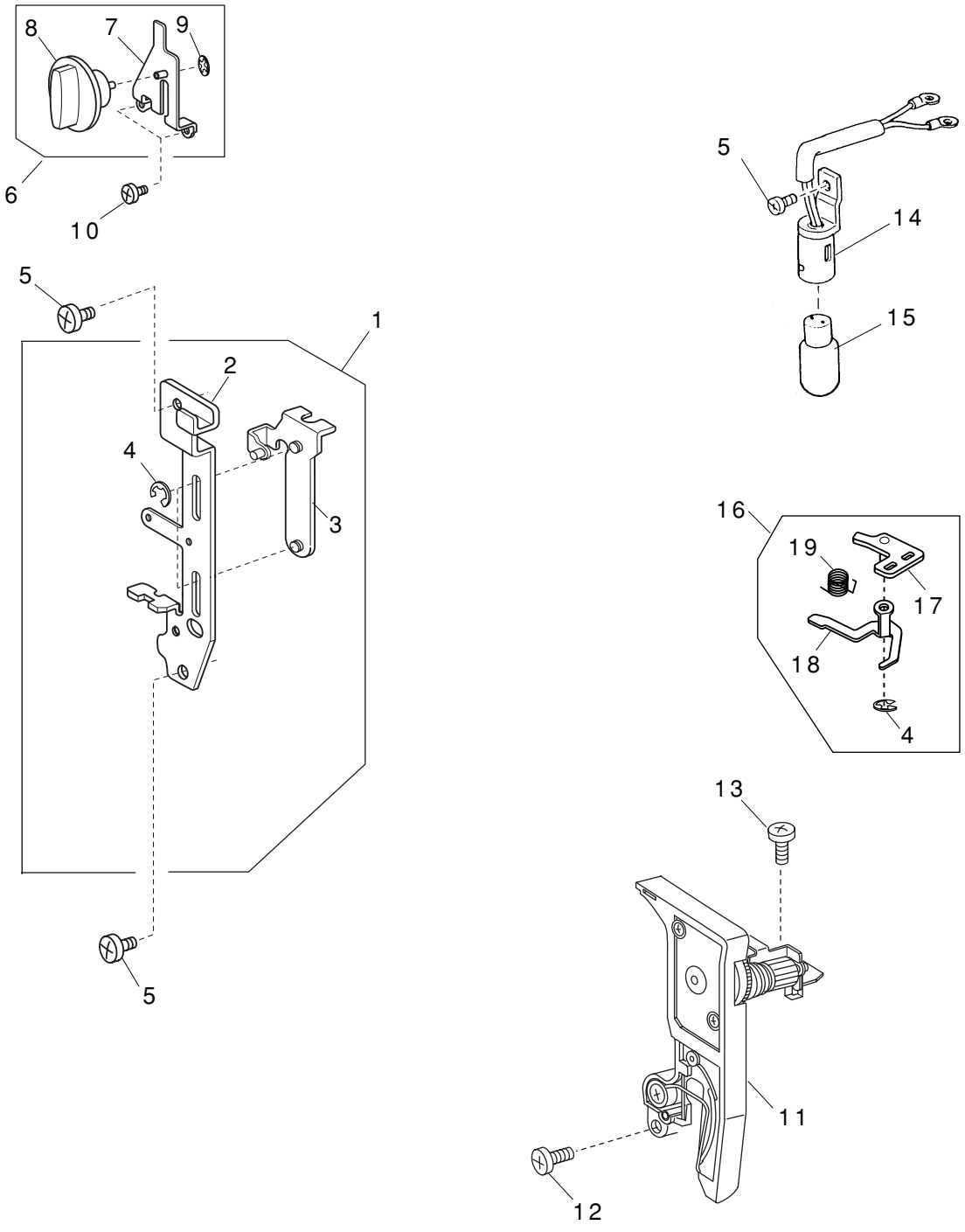

PARTS LIST

MODEL 509

KEY NO.	PART NO.	DESCRIPTION	REMARKS
1	507615000	Front bracket (unit)	
2	507007117	Front bracket	
3	501009007	Presser foot pressure adjusting plate	
4	000002105	Snap ring E3	
5	000081005	Setscrew 4X8	
6	507607009	Presser foot pressure dial (unit)	
7	501008109	Dialset plate	
8	507008004	Presser foot pressure dial	
9	000014007	Snap ring CS4	
10	000106203	Setscrew 3.5X4	
11	507504005	Thread tension (unit)	
12	000101703	Setscrew 4X12	
13	000115205	Setscrew 4X6	
14	647510805	Lamp socket (unit) (USA)	
	647513060	Lamp socket (unit) (Canada)	
	507611006	Lamp socket (unit) (220-240V)	
15	000009803	Lamp 120V 15W (120V)	
	000009009	Lamp 240V 15W (220-240V)	
16	507638009	Thread tension release arm (unit)	
17	752055002	Thread tension release arm base	
18	751215009	Thread tension release arm	
19	752056003	Thread tension release spring	

PARTS LIST

MODEL 509

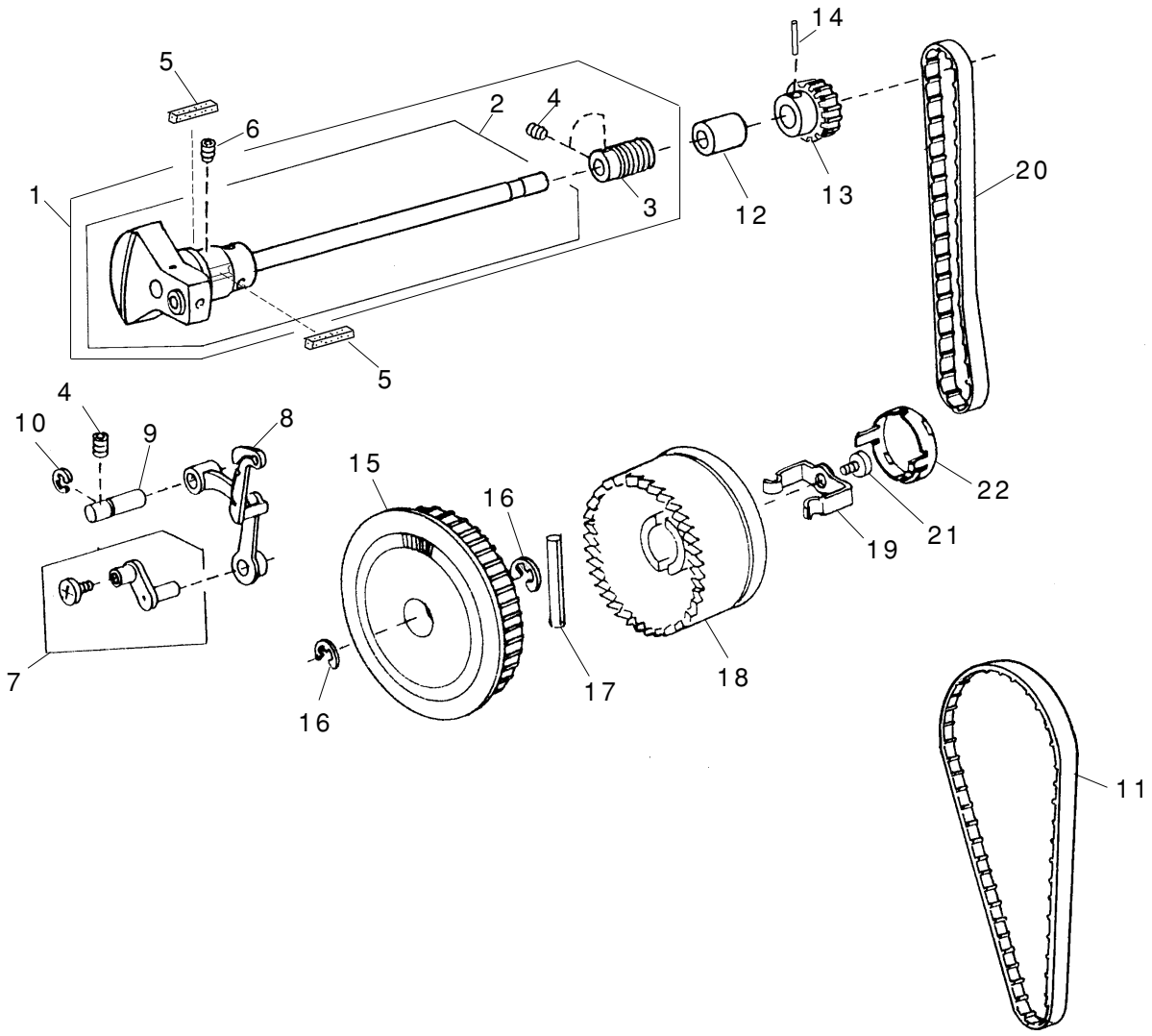

PARTS LIST

KEY NO.	PART NO.	DESCRIPTION	REMARKS
1	756607100	Upper shaft (unit)	
2	756504003	Upper shaft (unit)	
3	507059000	Worm	
4	000111201	Hexagonal socket screw 4X4	
5	731384008	Felt	
6	000111304	Hexagonal socket screw 5X5	
7	652512009	Needle bar crank pin (unit)	
8	820511108	Thread take-up lever (unit)	
9	650062003	Thread take-up lever pin	
10	000002806	Snap ring E6	
11	653139012	Timing belt	
12	673062004	Upper shaft rear bushing	
13	756017004	Upper shaft gear	
14	000020501	Knock pin 3X22	
15	756018005	Belt wheel	
16	000030205	Snap ring E8	
17	000023803	Knock pin 4X40	
18	639097127	Handwheel	
19	639113016	Clutch spring	
20	650071005	Timing belt	
21	000081005	Setscrew 4X8	
22	650070129	Handwheel cap	

PARTS LIST

MODEL 509

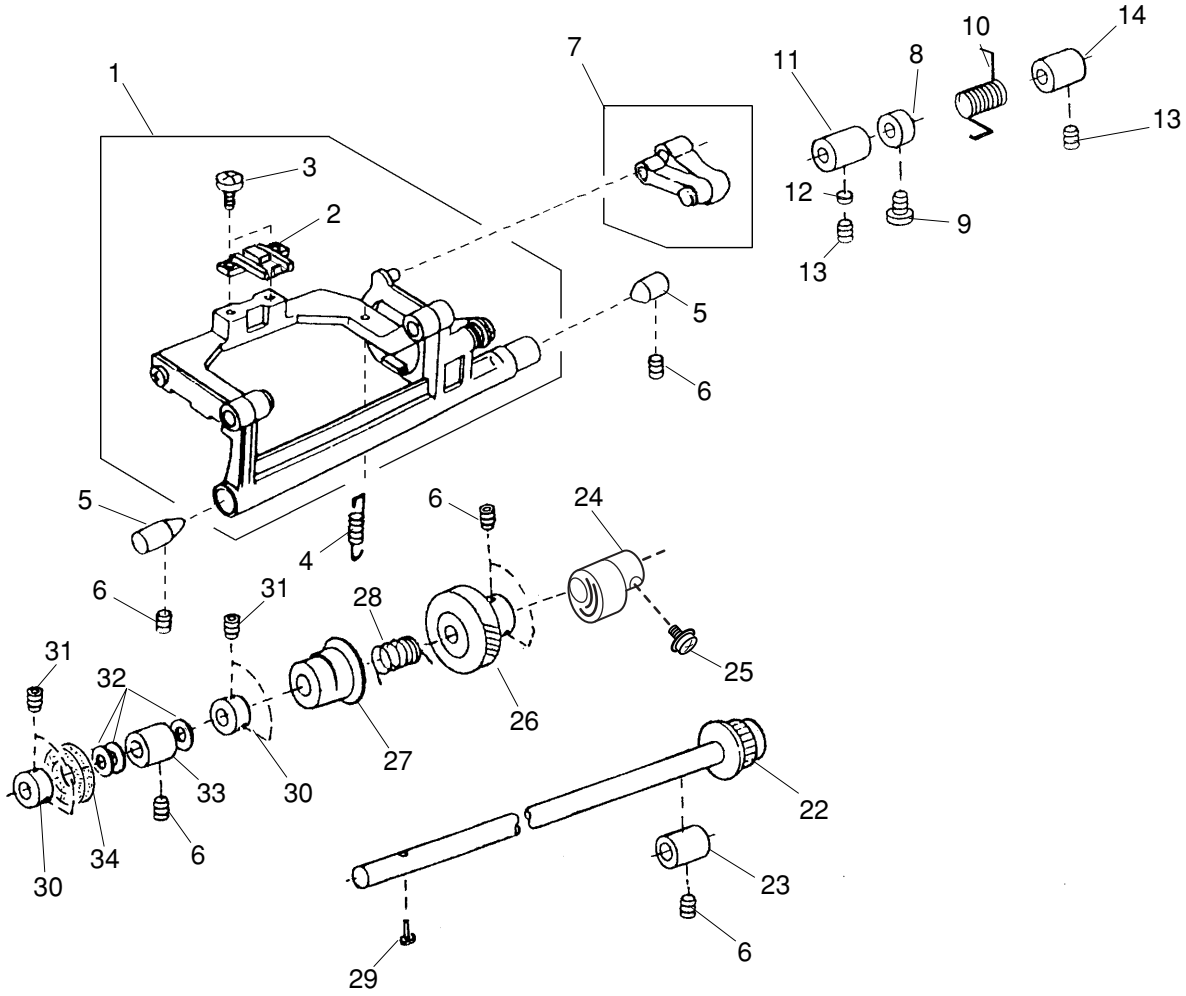

PARTS LIST

KEY NO.	PART NO.	DESCRIPTION	REMARKS
1	751666009	Feed lock shaft (unit)	
2	653193003	Feed dog	
3	000104005	Setscrew 3.5X8	
4	650085002	Feed base spring	
5	738055008	Straight pin	
6	000111304	Hexagonal socket screw 5X5	
7	650612004	Feed regulator (unit)	
8	820387000	Ring	
9	000081005	Setscrew 4X8	
10	507095008	Feed regulator spring	
11	625144002	Feed shaft bushing (front)	
12	650175000	Cushion	
13	000111108	Hexagonal socket screw 4X6	
14	650092002	Feed shaft bushing (rear)	
15	507614009	Feed regulating plate (unit)	
16	507062006	Feed shaft	
17	507011103	Feed shaft set plate	
18	000081500	Setscrew 3X12	
19	000160102	Adjustable lock nut 4	
20	507063007	Feed regulating plate	
21	648010009	Setscrew	
22	751612206	Lower shaft (unit)	
23	650079003	Lower shaft bushing (rear)	
24	751148000	Feed cam	
25	000115009	Setscrew TP 3X8	
26	650076000	Lower shaft gear	
27	753183025	Feed lifting cam	
28	686035008	Feed lifting cam spring	
29	820161006	Feed lifting pin	
30	820166001	Lower shaft ring	
31	000111201	Hexagonal socket screw 4X4	
32	000038502	Washer 8X0.5	
33	650078002	Lower shaft bushing (front)	
34	735143005	Felt	
35	648010009	Setscrew	

PARTS LIST

MODEL 509

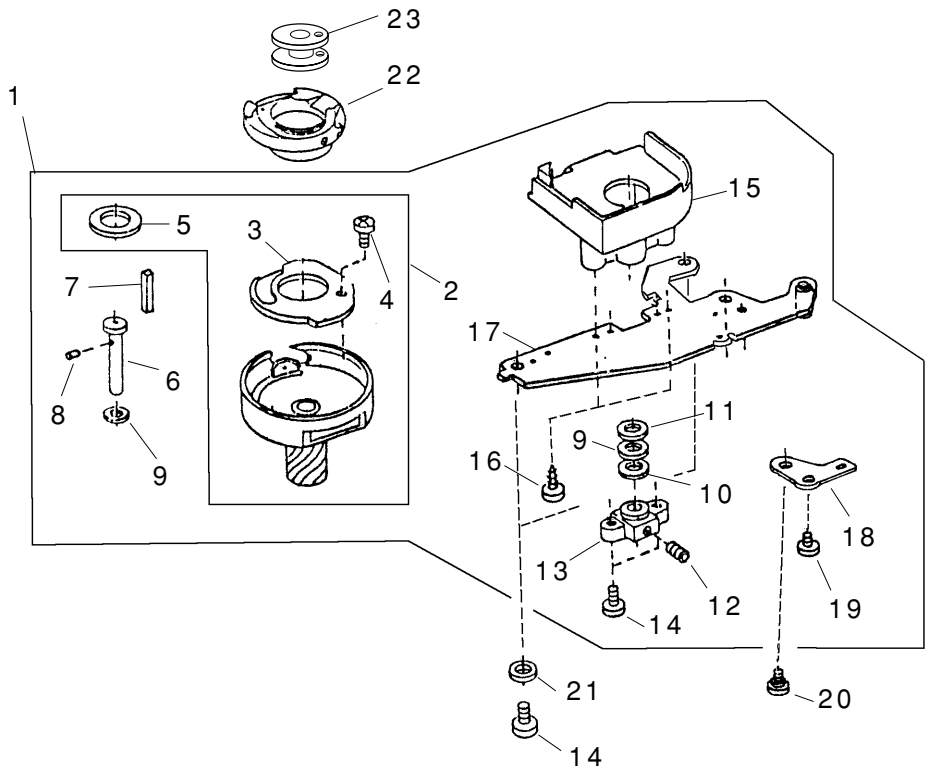

PARTS LIST

KEY NO.	PART NO.	DESCRIPTION	REMARKS
1	827614022	Hook race (unit)	
2	652623004	Hook body (unit)	
3	627191000	Hook bottom plate	
4	820374004	Setscrew 2X2.3	
5	627190010	Magnet	
6	820123006	Hook race shaft	
7	820124007	Oil string (1)	
8	820125008	Oil string (2)	
9	000038409	Washer	
10	625102008	Washer	
11	627192001	Hook race shaft washer	
12	000111304	Hexagonal socket screw 5X5	
13	650094004	Hook race shaft base	
14	000081005	Setscrew 4X8	
15	827040009	Cover	
16	000107204	Setscrew 3X12	
17	823106002	Hook race set plate	
18	650171006	Positioning plate	
19	000101404	Setscrew 4X6	
20	650172007	Setscrew	
21	000070506	Washer	
22	627569106	Bobbin holder (unit)	
23	102261000	Bobbin	

PARTS LIST

MODEL 509

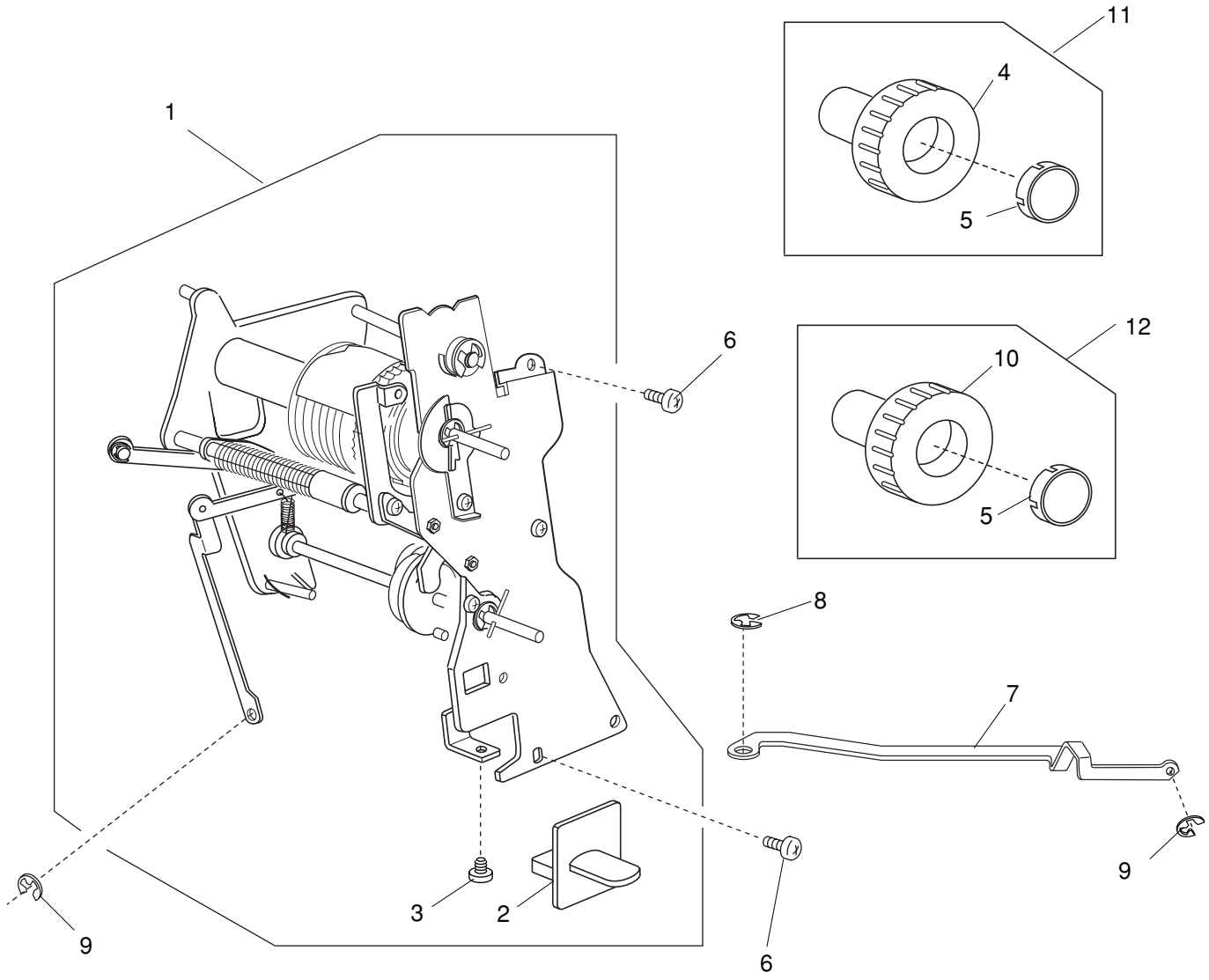

PARTS LIST

KEY NO.	PART NO.	DESCRIPTION	REMARKS
1	507616001	Cam block (unit)	
2	507109109	R Lever	
3	000107307	Setscrew 3X8	
4	507112183	Pattern selector dial	
5	507113003	Dial cap	
6	000081005	Setscrew 4X8	
7	507066000	Zigzag width rod	
8	000002507	Snap ring E4	
9	000002105	Snap ring E3	
10	507112194	Feed dial	
11	507635800	Pattern selector dial (unit)	
12	507635903	Feed dial (unit)	

PARTS LIST

MODEL 509

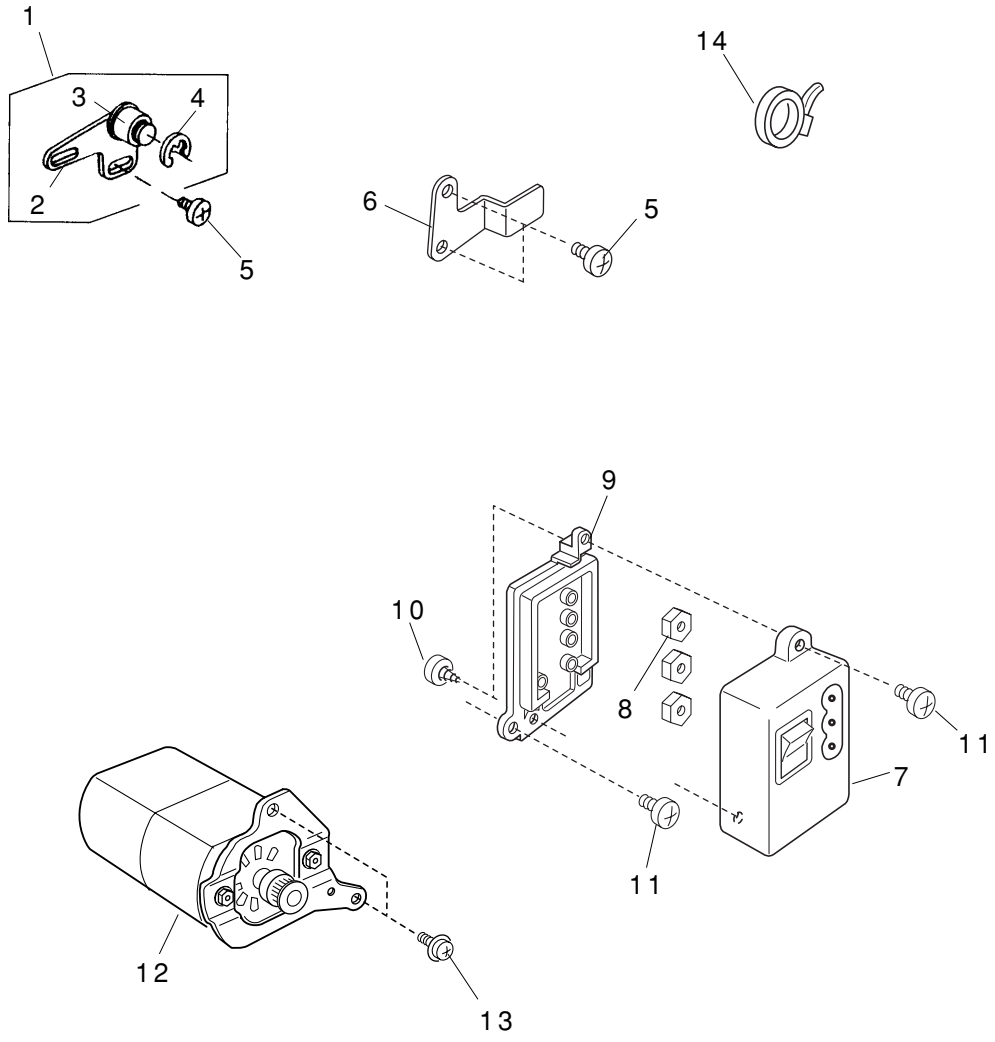

PARTS LIST

KEY NO.	PART NO.	DESCRIPTION	REMARKS
1	753619003	Idler (unit)	
2	753119008	Idler base	
3	625217100	Idler	
4	000002806	Snap ring E6	
5	000081005	Setscrew 4X8	
6	507067001	Set plate	
7	739505403	Machine socket (120V)	
	739503308	Machine socket (220-240V)	
8	000060802	Nut 3-1-5.5	
9	505064002	Machine socket cover	
10	000107802	Setscrew 3X10	
11	000103509	Setscrew 4X10	
12	505623005	Motor (unit) (USA & Canada)	
	752671103	Motor (unit) (Australia & UK)	
	752671309	Motor (unit) (Continental Europe)	
13	000115504	Setscrew TP 5X10	
14	000053709	Cord binder	

PARTS LIST

MODEL 509

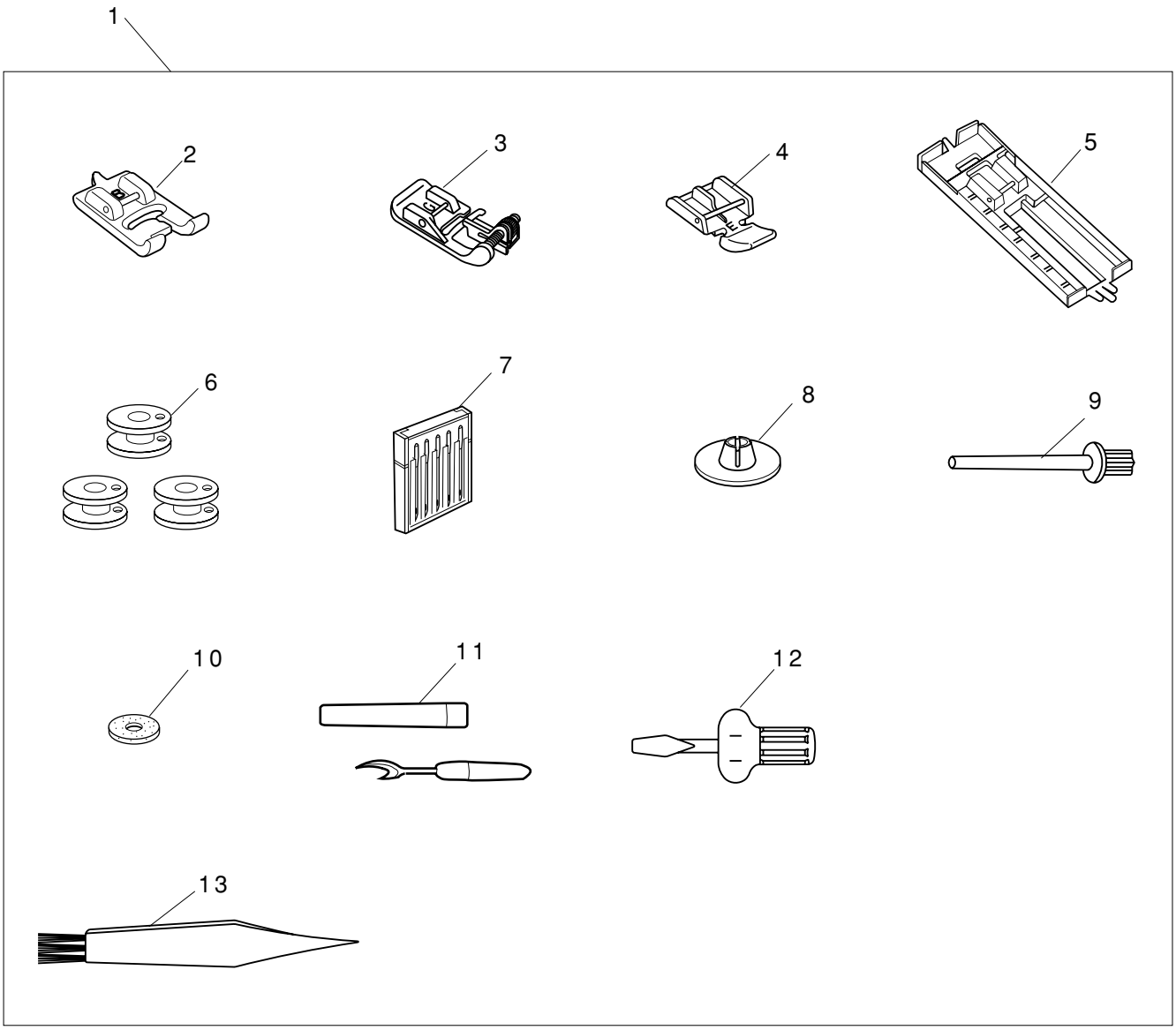

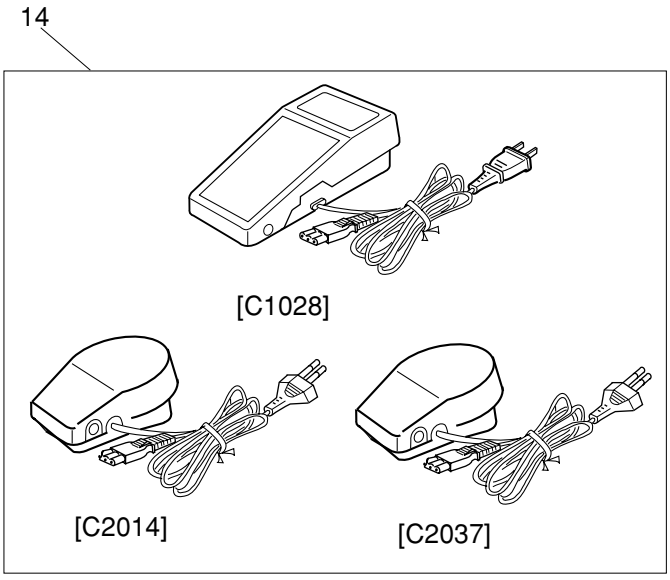

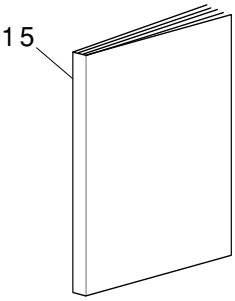

PARTS LIST

KEY NO.	PART NO.	DESCRIPTION	REMARKS
1	507873008	Standard accessories (unit)	
2	820801016	BH foot (unit)	
3	820817015	Blind hem foot (unit)	
4	829801002	Zipper foot (unit)	
5	825813016	BH foot (unit)	
6	102261000	Bobbin	
7	540401026	Needle case (unit)	
8	822019509	Spool holder (small)	
9	625031500	Additional spool pin(2)	
10	102403109	Felt	
11	647808009	Seam ripper (buttonhole opener) (unit)	
12	820832005	Screwdriver (large)	
13	802424004	Lint brush	
14	C1028	Foot control (unit) (USA & Canada)	
	C2014	Foot control (unit) (Australia)	
	C2037	Foot control (unit) (Continental Europe)	
	C2041	Foot control (unit) (UK)	
15	507800200	Instruction book (EnSpFr)	
	507800222	Instruction book (DuFrGe)	