creative 1371 A
Instruction Book

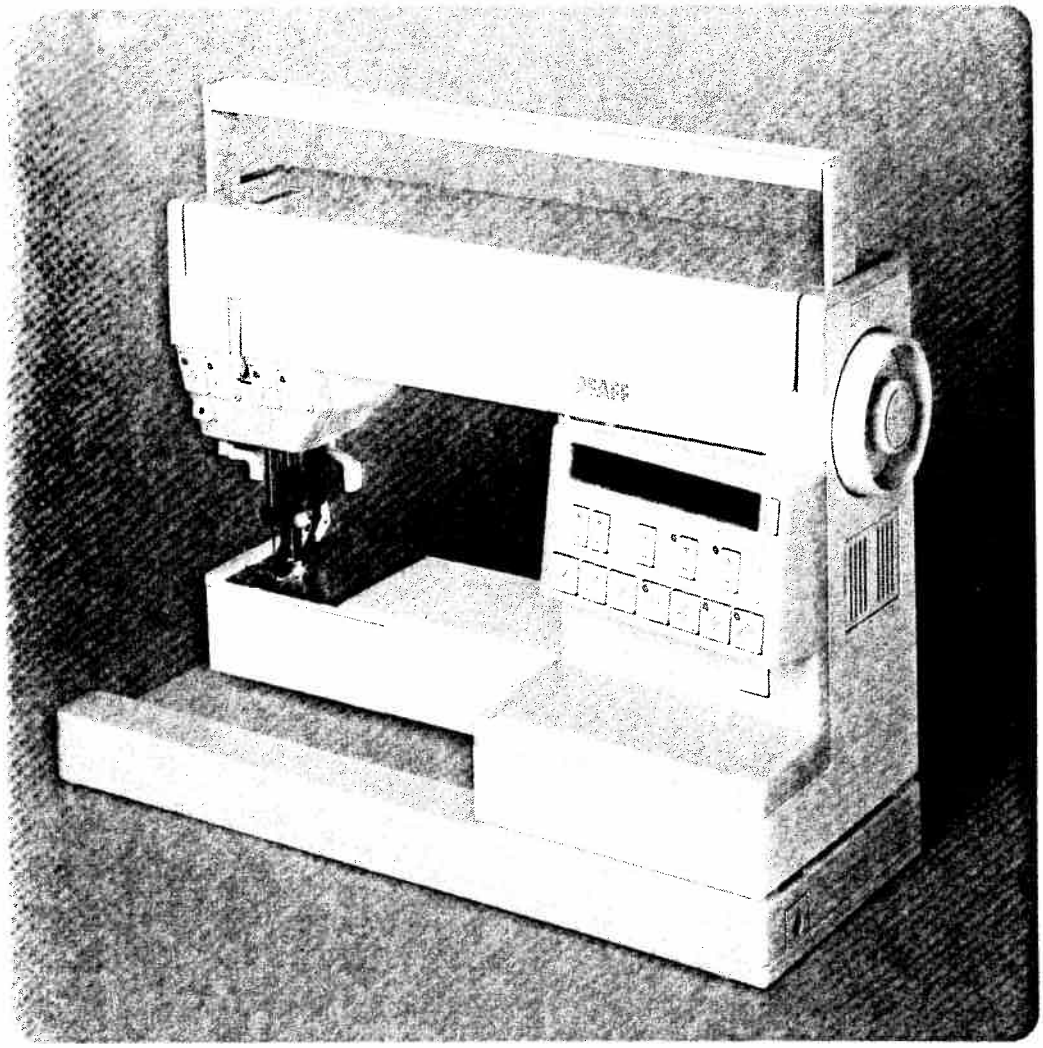

Fold out this page

Some safety rules

a) Take care to avoid injury to your fingers by the needle during sewing.
b) Make sure you unplug the power cord whenever you have to leave the machine or want to clean it, oil it or change mechanical and accessory parts.
c) Be sure to use only a 15-watt light bulb in the sewing lamp.
d) The drive belt must never be adjusted by anyone but an authorized Pfaff agent.

Contents for the operating instructions

	Page
Balancing out and pattern length setting	21, 22
Bobbin winding preparations	4, 5
Changing the fuse	32
Changing the light bulb	31
Changing the needle	27
Changing the sewing foot	30
Checking the bobbin thread tension	8
Checking the needle thread tension	14
Cleaning and oiling	31
Creative computer keyboard	19
Detachable work support and accessories	28, 29
Drawing up the bobbin thread	12
Dropping the feed dog	27
Dual feed	16
Foot control	14
Important notes	32
Inserting the bobbin	8
Inserting the bobbin case	9
Machine connection	2, 3
Memorizing and cancelling of program combinations	22, 23
Needle position for straight stitch	20, 26
Operating keys of electronic system	18
Pattern mirroring	25
Pattern start setting	24
Placing spool of thread on pin	9
Presser bar lifter	13
Program selection	20
Remarks on safety	15
Repeating program combinations	24
Sewing feet	29
Single pattern setting	25
Special accessories	33
Stitch length and pattern length setting	21
Stitch width setting	20
Straight-stitch sewing	26
Thread cutter	15
Trouble shooting	34, 35
Twin-needle sewing	24
Upper threading	10
Winding from a second spool	6
Winding through the needle	7
Zigzag sewing	26

Operating instructions pages	1 – 35
Sewing instructions pages	36 – 105

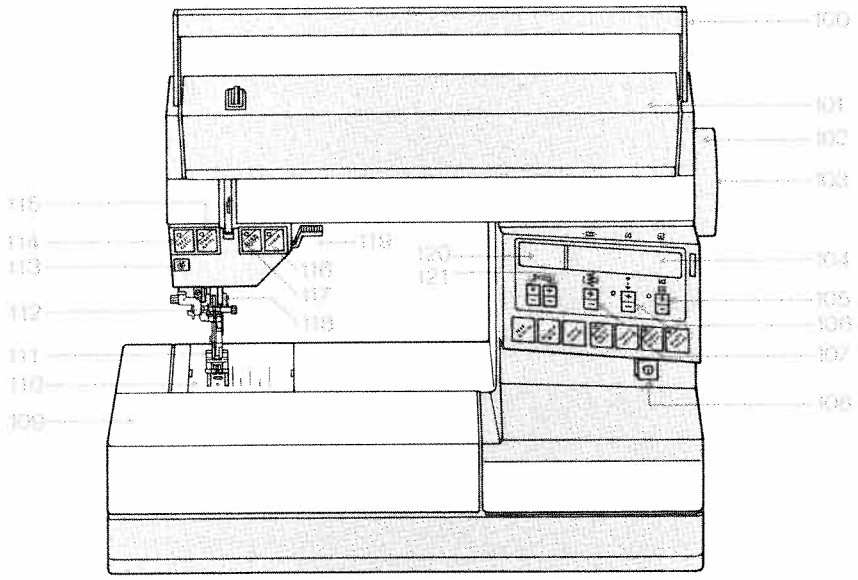
100
101
102
103
104
105
106
107
108
109
110
111
112
113
114
115
116
117
118
119
120
121

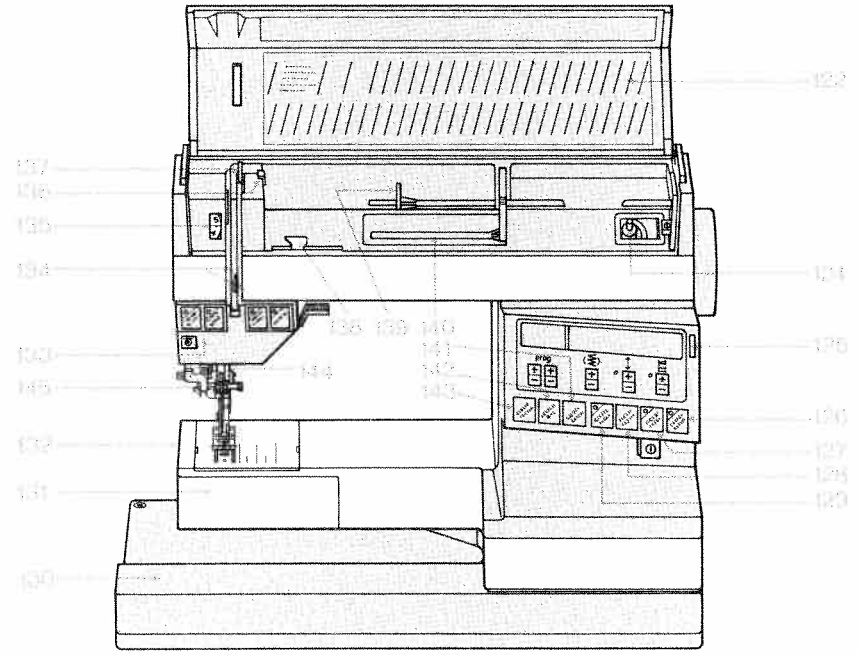
122
123
124
125
126
127
128
129
130
131
132
133
134
135
136
137
138
139
140
141
142
143
144
145

Parts of your sewing machine

100 Carrying handle
101 Hinged top cover
102 Hand wheel
103 Stop motion knob
104 Display
105 Balancing-out & pattern length key
106 Stitch length & pattern length key
107 Stitch width key
108 Master switch
109 Detachable work support with accessory box and compartment
110 Needle plate
111 Sewing foot holder with sewing foot
112 Needle holder with set screw
113 Bobbin thread monitor light
114 "needle down" key
115 "sew slow" key
116 "reverse" key
117 "tie-off / buttonhole" key
118 Presser bar with thread cutter
119 Presser bar lifter
120 Program display
121 Programming keys (2)
122 Program chart (see sewing book)
124 Bobbin winder
125 Key for program cycle vertification
126 "pattern mirroring" key
127 "single pattern" key
128 "pattern start" key
129 "twin needle" key
130 Base plate
131 Free arm cover, enclosing sewing hook
132 Free arm
133 Sewing light
134 Threading slots
135 Needle thread tension
136 Bobbin winder thread guide
137 Take-up lever
138 Bobbin winder thread guide (swing-out)
139 Spool holder with unreeling disc
140 Second spool holder (swing-up)
141 "repeat" key
142 "corrector" key
143 "program" key
144 Dual feed with thread cutter
145 Threader

Dear Consumer:

We are sorry for the inconvenience, but in the rush to publish the Pfaff Creative 1371 Limited Edition Instruction Book, errors were overlooked. Please make the following changes in your Instruction Book:

Page 18...TIE/OFF BUTTONHOLE

If you wish to tie off a seam at the beginning, touch key 117 until it is lit. Sew. The machine will then tie off and the light will also go off.

When you touch key 117 during sewing a seam, the light will go on and the seam will be tied off immediately.

When you sew a pattern and touch key 117 during sewing, it will be tied off at the end of the pattern.

Then the light will go off.

When sewing a buttonhole (program 13), key 117 is used to determine and memorize the buttonhole length. (See page 100).

Page 20...STITCH WIDTH SETTING

3. Use program 01 to sew a straight stitch with 13 possible needle positions. This makes topstitching very easy.

Page 32...IMPORTANT

The Pfaff Creative 1371 Limited Edition does not require batteries because it does not have a constant memory. Therefore, please disregard the second paragraph.

Page 102...SEWING ZIPPERS

If you wish to sew closer to the coil of the zipper or the bulk of a welt or piping, use program 01:

a) if the zipper foot is to the left of the zipper or welt, use program 01 with pattern mirroring key lit

b) if the zipper foot is to the right of the zipper or welt, use program 01 without lighting the pattern mirroring key.

Please note that programm 00 can be used, but the stitch will be sewn 1/8" away from the coil of the zipper or bulk of piping.

Dear Consumer:

We are sorry for the inconvenience, but in the rush to publish the Pfaff Creative 1371 Limited Edition Instruction Book, errors were overlooked. Please make the following changes in your Instruction Book:

Page 18...TIE/OFF BUTTONHOLE

If you wish to tie off a seam at the beginning, touch key 117 until it is lit. Sew. The machine will then tie off and the light will also go off.

When you touch key 117 during sewing a seam, the light will go on and the seam will be tied off immediately.

When you sew a pattern and touch key 117 during sewing, it will be tied off at the end of the pattern.

Then the light will go off.

When sewing a buttonhole (program 13), key 117 is used to determine and memorize the buttonhole length. (See page 100).

Page 20...STITCH WIDTH SETTING

3. Use program 01 to sew a straight stitch with 13 possible needle positions. This makes topstitching very easy.

Page 32...IMPORTANT

The Pfaff Creative 1371 Limited Edition does not require batteries because it does not have a constant memory. Therefore, please disregard the second paragraph.

Page 102...SEWING ZIPPERS

If you wish to sew closer to the coil of the zipper or the bulk of a welt or piping, use program 01:

a) if the zipper foot is to the left of the zipper or welt, use program 01 with pattern mirroring key lit

b) if the zipper foot is to the right of the zipper or welt, use program 01 without lighting the pattern mirroring key.

Please note that programm 00 can be used, but the stitch will be sewn 1/8" away from the coil of the zipper or bulk of piping.

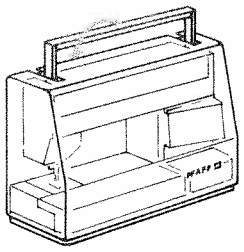

Electrical connection
Fold down the carrying handle.

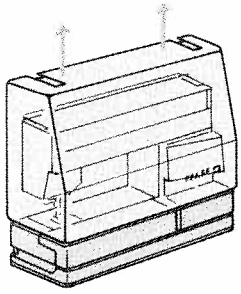

Lift off the cover.

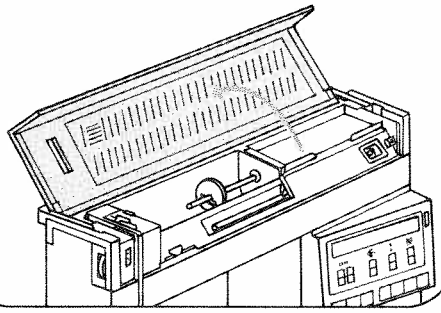

Open lid 101.

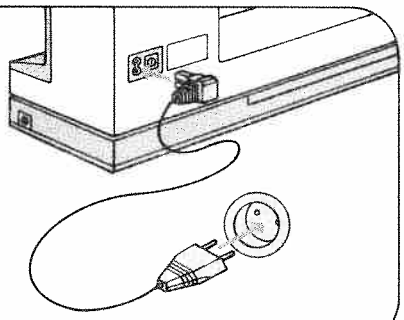

Plug in the machine.

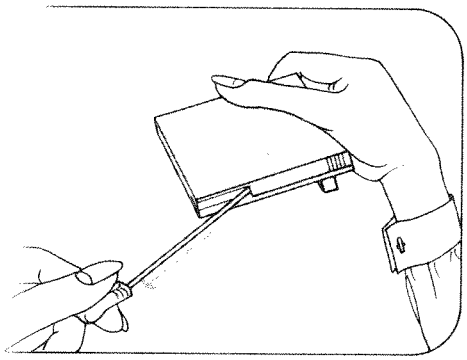

Pull the power cord out of the foot control.

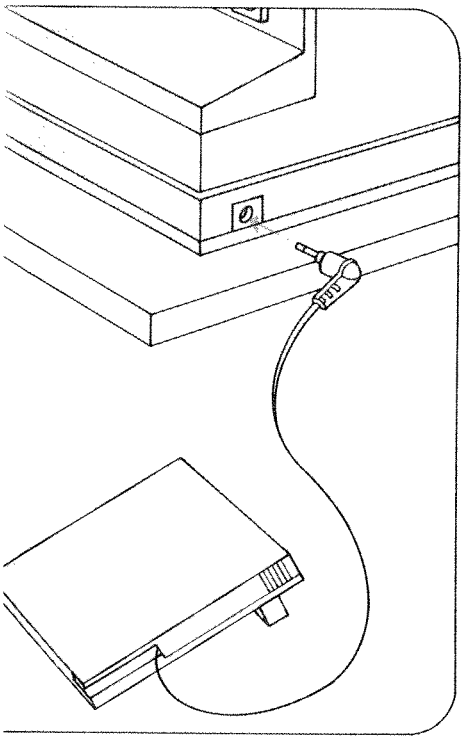

Plug the foot control lead into the machine socket and place the foot control on the floor.

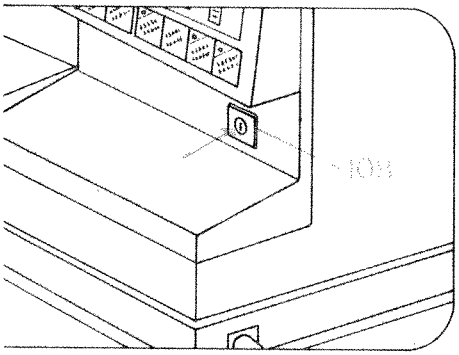

Push master switch 108.
The sewing light then goes on.

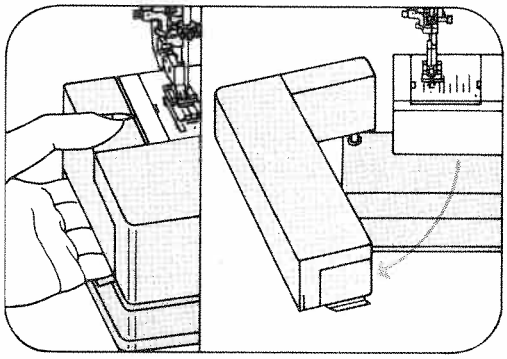

Bobbin winding preparations: Reach under the work support and swing it out toward the left.

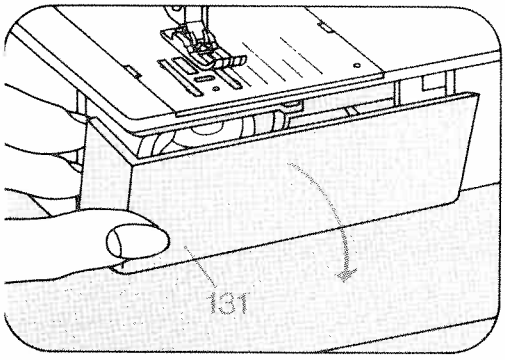

Open free arm cover 131.

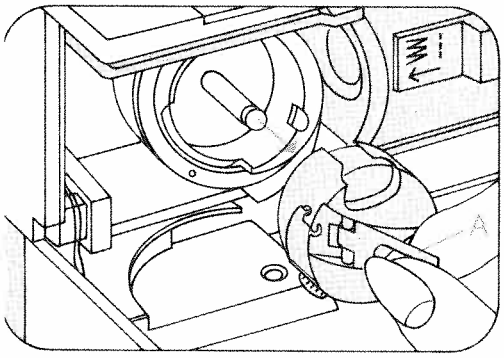

Raise latch A and pull out the bobbin case.

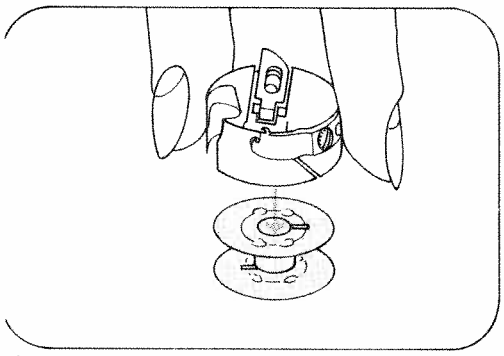

Release latch A and take out the bobbin.

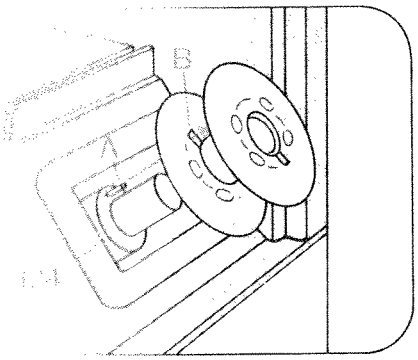

Place the bobbin on winder 124 and turn it until pin A engages in slot B.

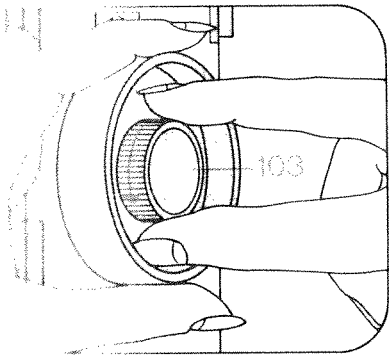

Disengaging the sewing mechanism: Hold the hand wheel steady and turn knob 103 towards you.

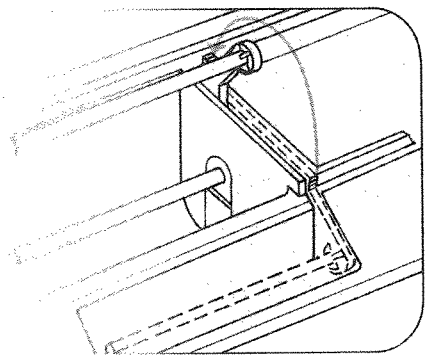

Swing the second thread spool towards the back.

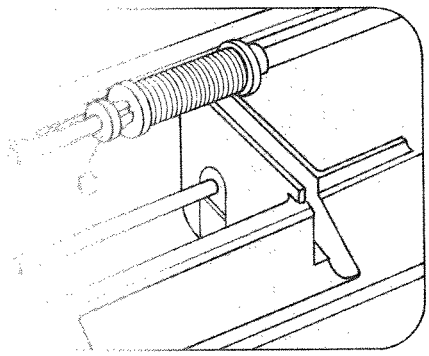

Push a spool of thread and the small unwinding disc C onto the holder.

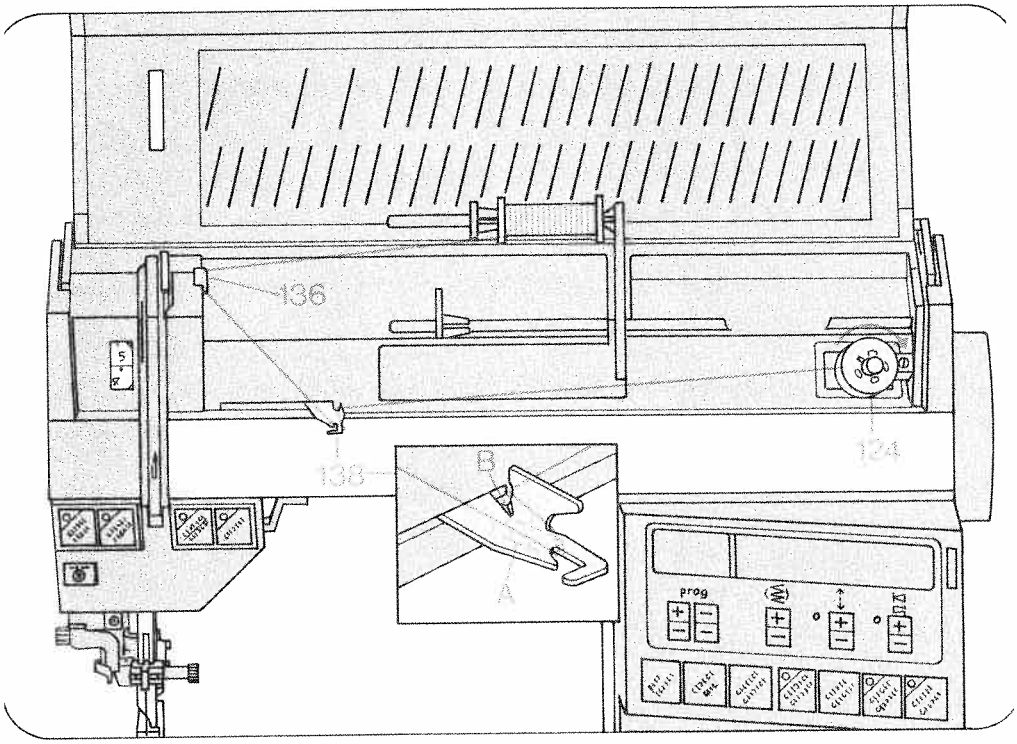

Winding from a second spool:
Switch on master switch.
Swing thread guide 138 forwards. Pull the thread through guide 136, then into guide 138, placing it between guide and tension spring A (see ill.) Wind a few turns of thread on the bobbin and push the bobbin towards the right.
Press down the foot control and wind bobbin. Push the full bobbin towards the left and take it out, cutting the thread in thread cutter B.

When you place a bobbin with thread slot on the spindle, the slot must point towards the right.

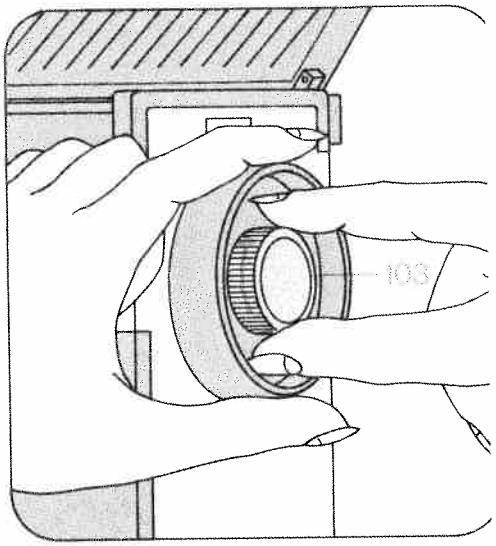

Engaging the sewing mechanism:
Hold the wheel firmly, turn disc 103 towards the back, then turn the hand wheel forward until it snaps in.

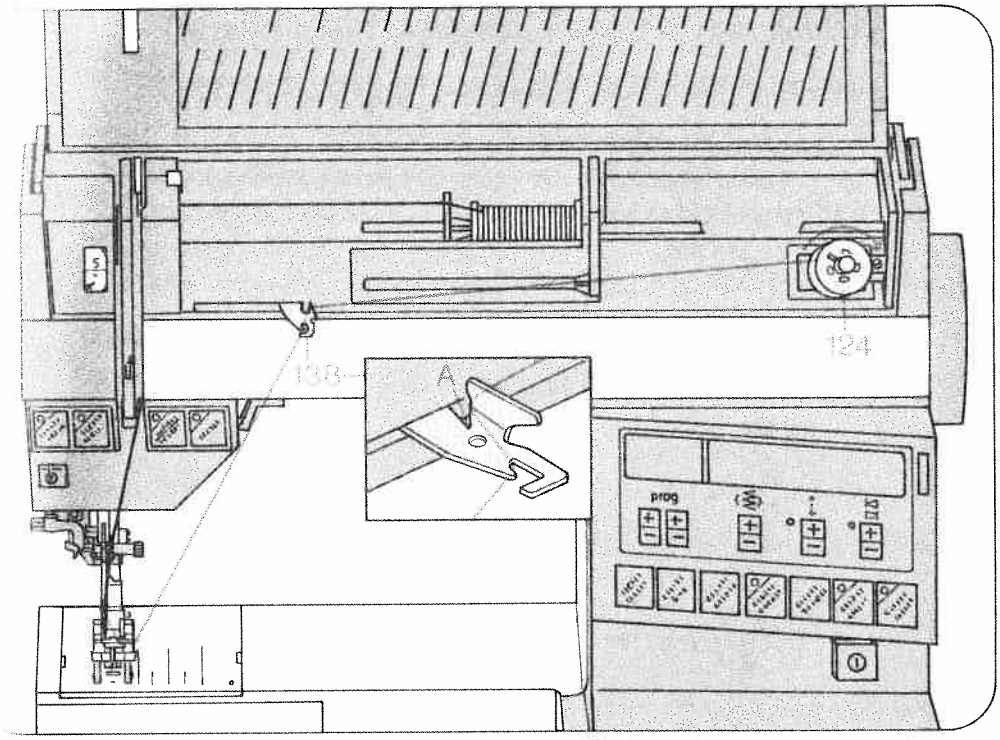

Winding through the needle:
Switch on master switch.
Engage dual feed.

Raise the sewing foot with the needle in its up position. Place a bobbin on spindle 124. Disengage the sewing mechanism. Draw the needle thread under the sewing foot, up and through guide 138 (see ill.). Wind a few turns of thread on the bobbin and push the bobbin towards the right. Press down the foot control and wind. Push the full bobbin towards the left and take it out, cutting the thread in thread cutter "A".

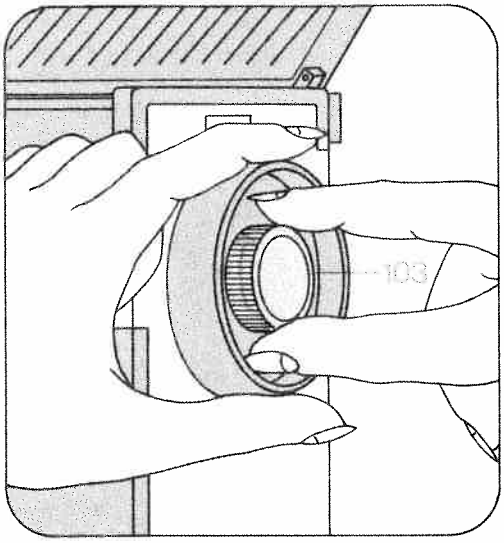

Engaging the sewing mechanism:
Hold the wheel firmly, turn disc 103 towards the back, then turn the hand wheel forward until it snaps in.

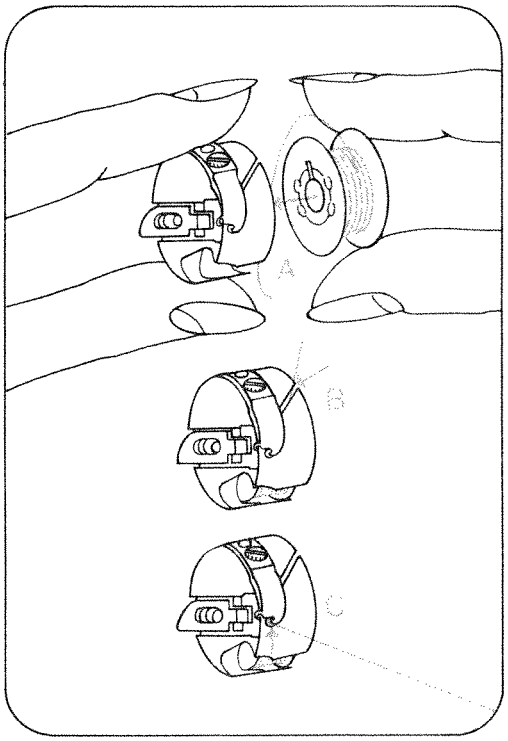

Inserting the bobbin: insert bobbin so that thread unwinds towards the back (A). Draw the thread into slot B and into eye C.

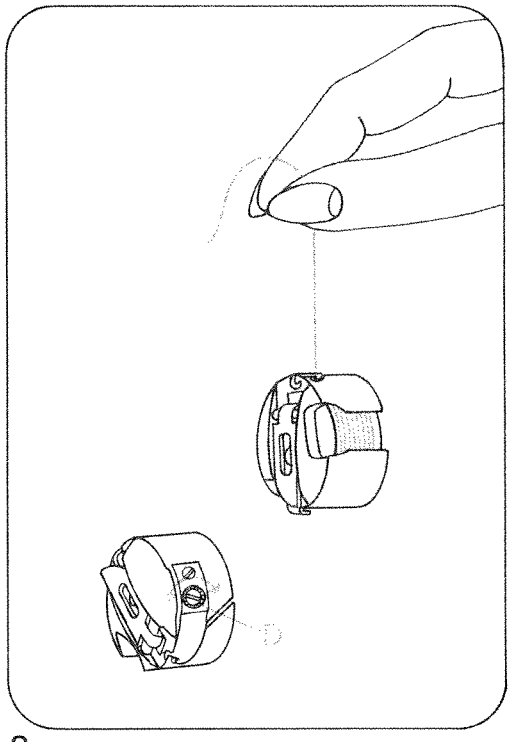

Checking the bobbin thread tension: With a brief, sharp upward movement of your hand the bobbin must gradually slip downwards. (Turn screw D to the right for stronger tension and to the left for weaker tension.

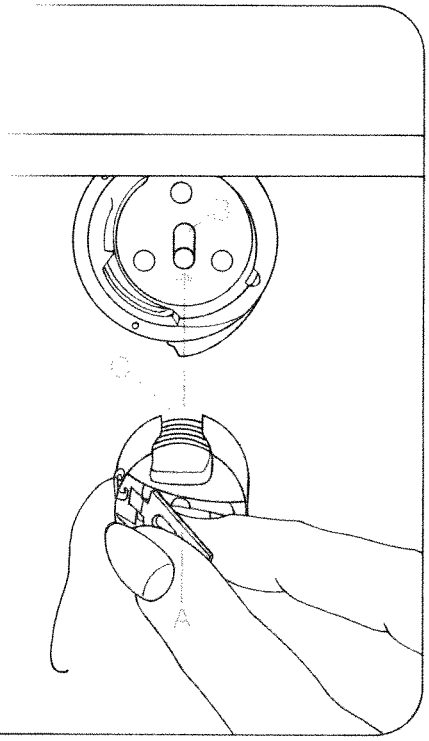

Inserting the bobbin case:
● *Switch off master switch 108.*
Raise latch A and push the bobbin case onto stud B as far as it will go, making sure cutout C points upwards.

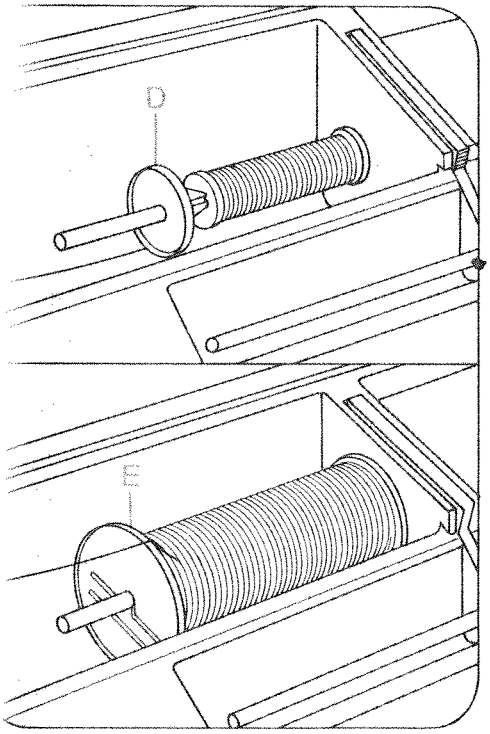

Placing spool of thread on pin: Place the small or medium-size unwinding disc D in front of small spools, and the large disc E in front of large spools.

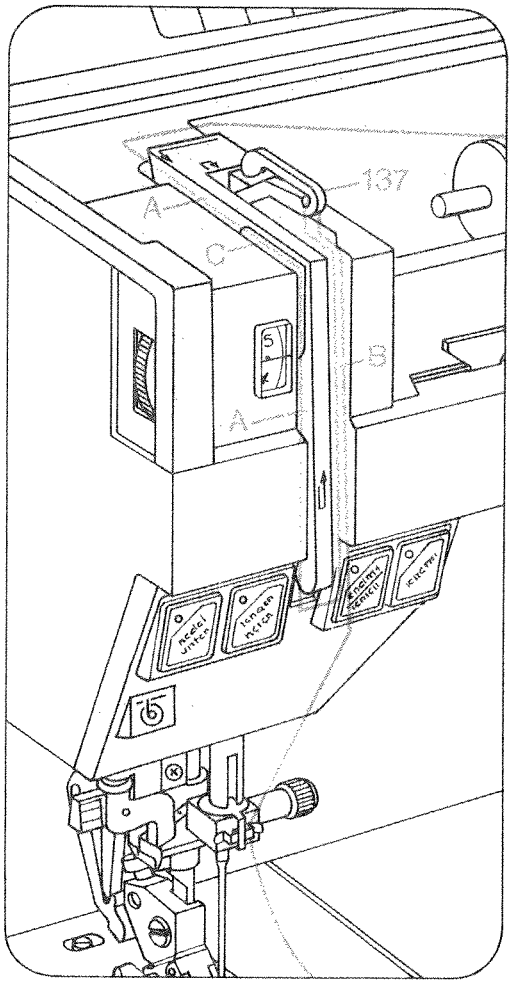

Upper threading:

● *Switch off master switch 108.*

With the needle in its top position, raise the sewing foot. Draw the thread into slot A, from below into slot B and take-up lever 137 (see arrows), then back into slot B and into the right thread guide on the needle holder.

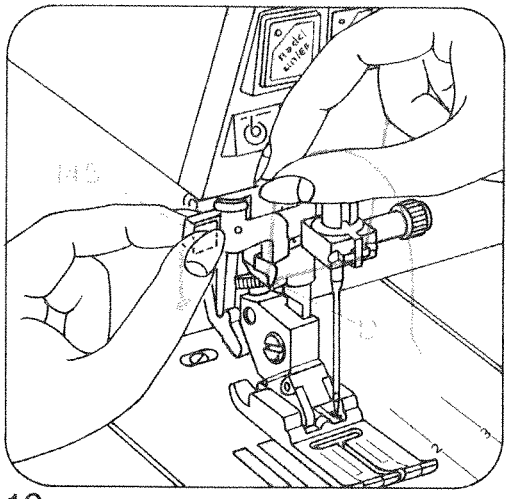

Place the needle thread behind hook D and hold it there. Pull threader 145 fully downwards.

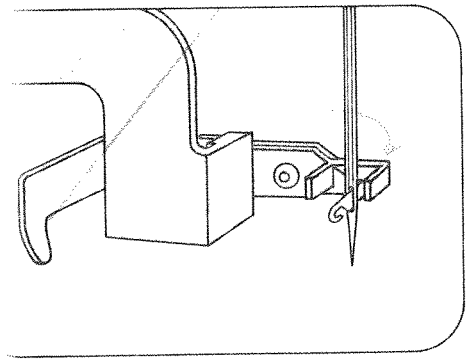

Swing threader forewards against needle.

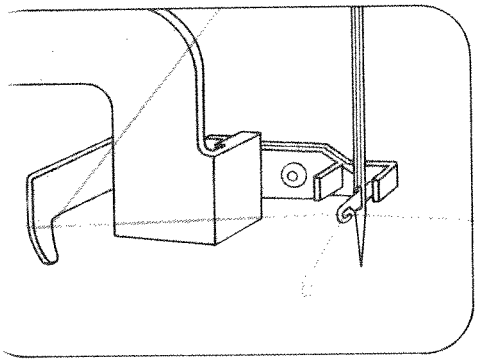

Place thread into hook E from below.

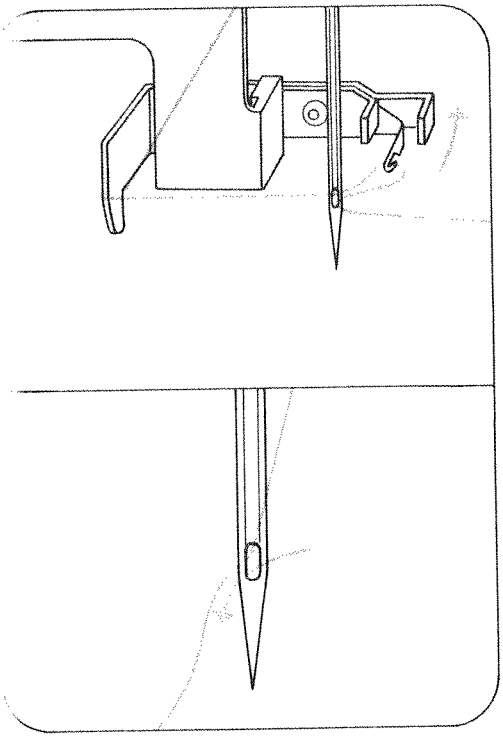

Swing threader backwards, release thread at same time and allow threader to move upwards, then pull the thread fully through the needle eye.

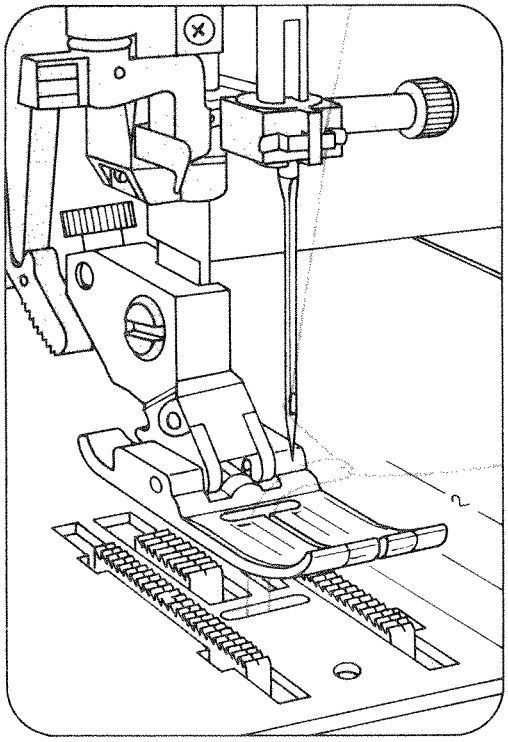

Hold the needle thread taut. Turn the hand wheel toward you until the needle moves down and up again. Needle and take-up lever must be raised. Pull the bobbin thread up by pulling on the needle thread.

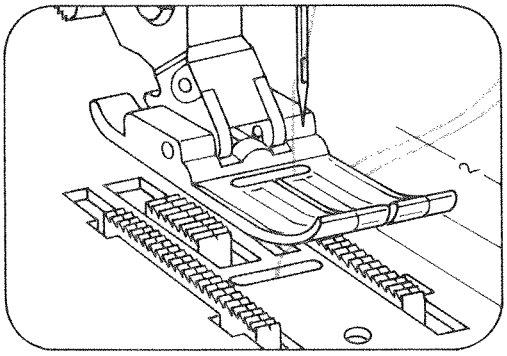

Place both threads to the right under the sewing foot.

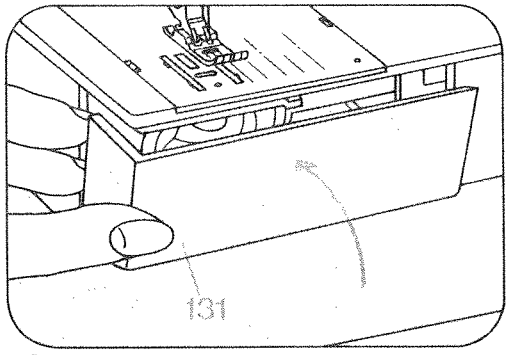

Close the free arm cover 131.

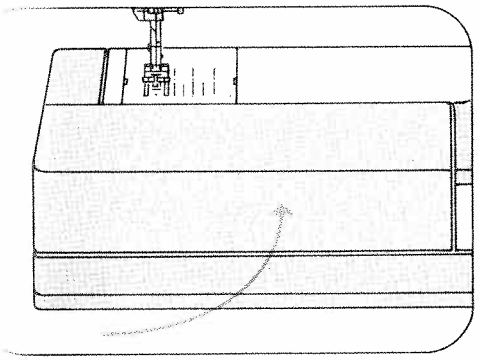

Swing work support 109 back against the free arm.

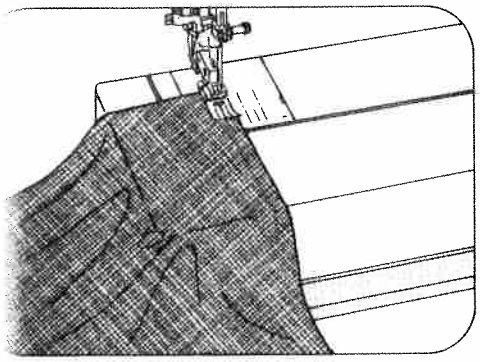

● *Switch off master switch 108.*
Place fabric under sewing foot.

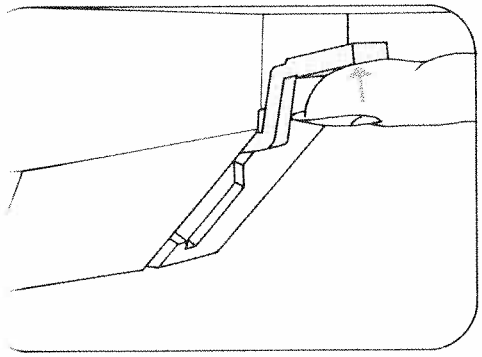

To insert extra-thick fabric plies raise lever 119 higher.

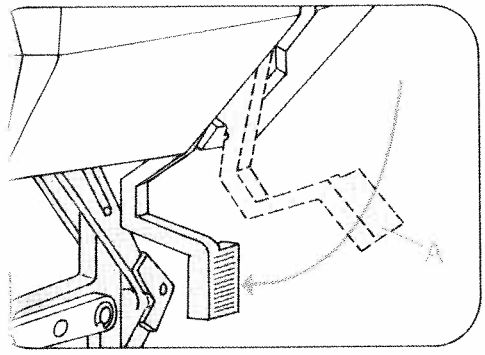

● *Switch on master switch 108.*
Lower presser bar lifter 119.
(A indicates the darning position).

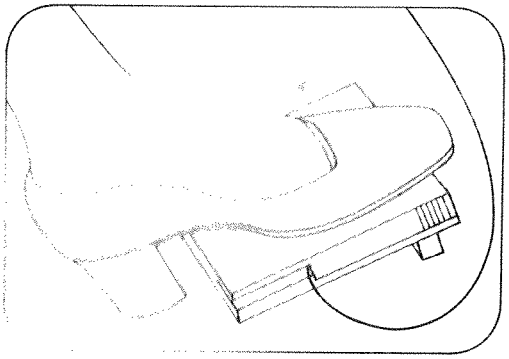

Operating the foot control: The farther you press the pedal down, the faster the machine runs.

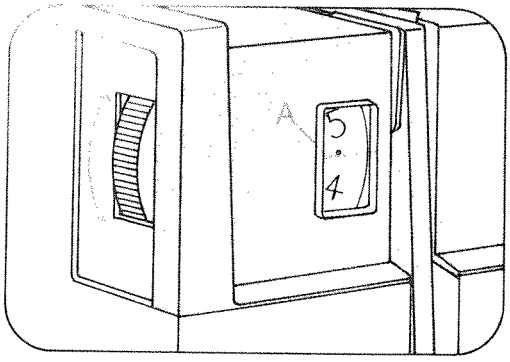

Needle thread tension 135
A = Setting mark.

Checking the needle thread tension:
The normal setting is in the white range between 3 and 5. The higher the number, the tighter the tension. To check the tension, set the machine for zigzag stitch by entering program 10 (page 22).
Sew a short seam. The threads should interlock in the middle of the material.

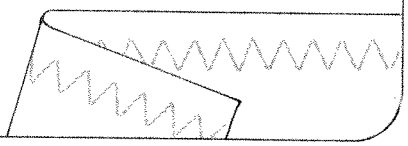

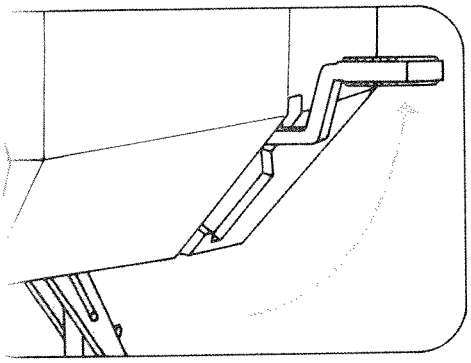

Raise presser bar lifter 119. Remove the fabric by pulling it towards the back.

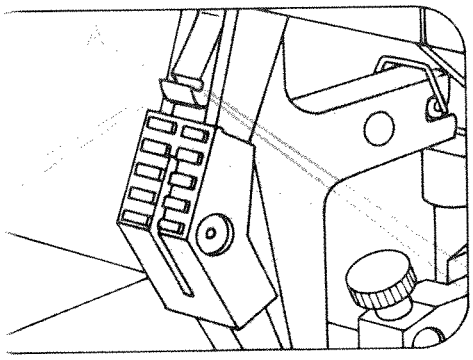

Thread cutter A: Draw the threads into the slot and pull them downwards.

Some safety rules

a) Take care to avoid injury to your fingers by the needle during sewing.
b) Make sure you unplug the power cord whenever you have to leave the machine or want to clean it, oil it or change mechanical and accessory parts.
c) Be sure to use only a 15-watt light bulb in the sewing lamp.
d) The drive belt must never be adjusted by anyone but an authorized Pfaff agent.

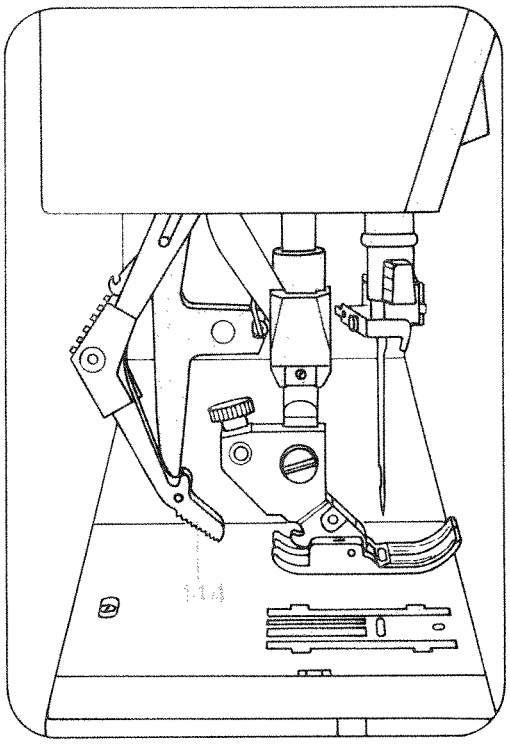

Dual feed
This prevents shifting of the material plies during sewing.
Before engaging or disengaging the dual feed always raise the sewing foot.

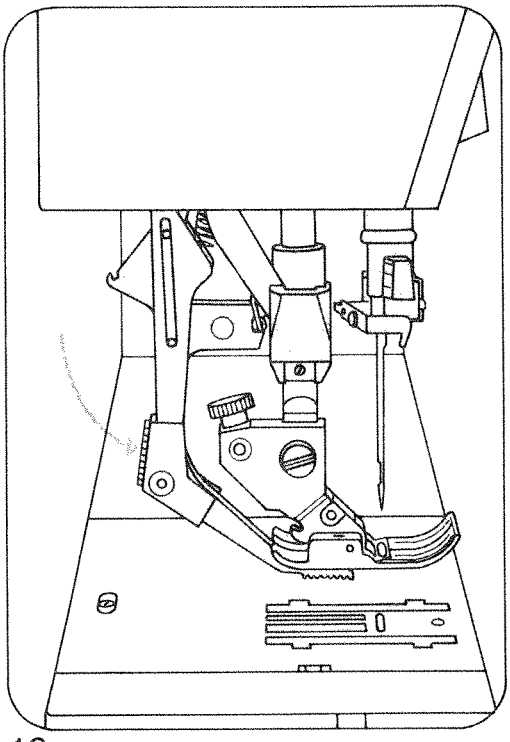

To engage: Lower dual feed 144 until it snaps in place.
To disengage: push dual feed lightly downwards, pull it towards the rear and allow it to move upwards.

Operating keys of the electronic system.
These are described on the following pages.

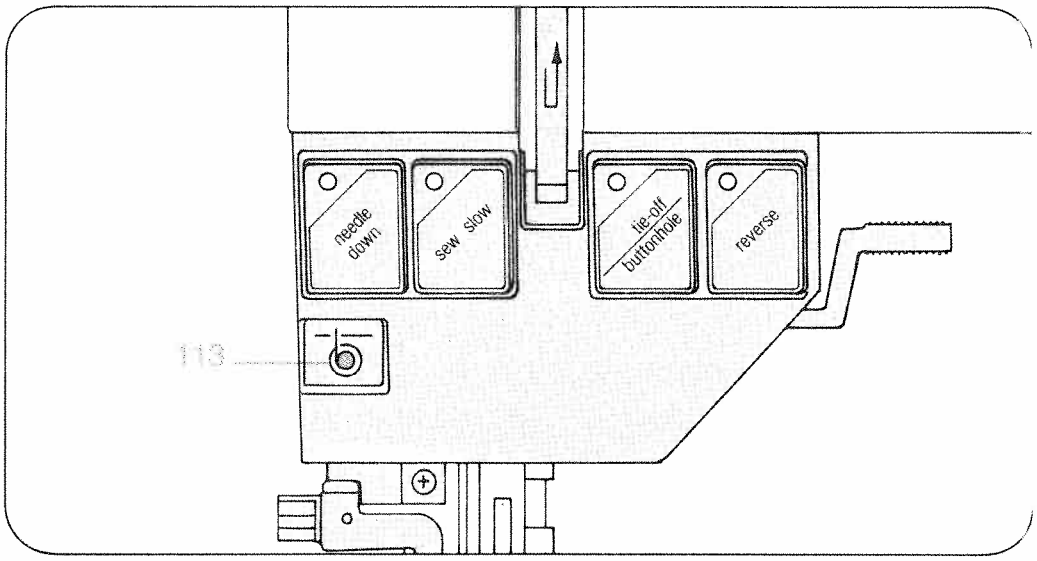

Electronic bobbin thread monitor: Bobbin thread monitor light 113 starts to flash when the bobbin thread is running out. It goes off when a full bobbin is inserted and sewing is resumed. Important: Free arm cover 131 must be kept closed.

Needle up and down positions: When the machine stops, the needle is always retained at its up position. When you push ***"needle down" key 114,*** the indicator light goes on and the needle remains down in the fabric when the machine stops. When you push key 114 again, the light goes off, the needle moves up and remains up.

Electronic top speed selection: When you press ***"sew slow" key 115,*** the indicator light goes on and the machine sews at half its speed. When you push key 115 again, the light goes off and the machine again sews at top speed.

Tie-off/buttonhole: When you push ***key 117,*** the indicator light goes on and the programmed seam is tied off at the beginning, then the light goes off again. When you push the key during sewing, the light goes on and a seam is tied off right away, while a pattern is tied off at the end. Then the light goes off. Buttonhole: When buttonhole program 86 is on, ***key 117*** serves to determine and memorize the seam length.

Reverse sewing: Push ***key 116*** before you start sewing. The indicator light goes on and the machine sews backwards permanently. When you push the key during sewing, the light does not go on and the machine sews backwards as long as you keep the key depressed.

Operation of the Creative computer

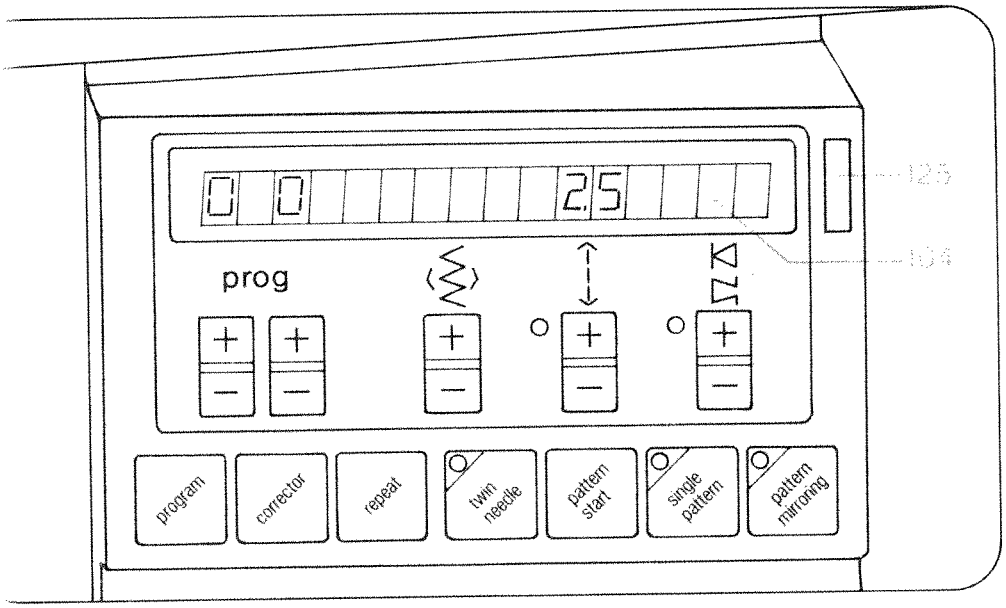

An alphabet, the numbers from 0 to 9 and 49 programs are stored in the Creative computer. The programs are shown in the table on the inside of the top cover together with the stitch pattern and the corresponding program number or symbol.
Each program is assigned an optimum width and length.
The machine settings appear in display 104 above the keys.
The programs can only be changed by pushing the keys above which a number or symbol appears.
The computer also contains a MEM-memory for program combinations.

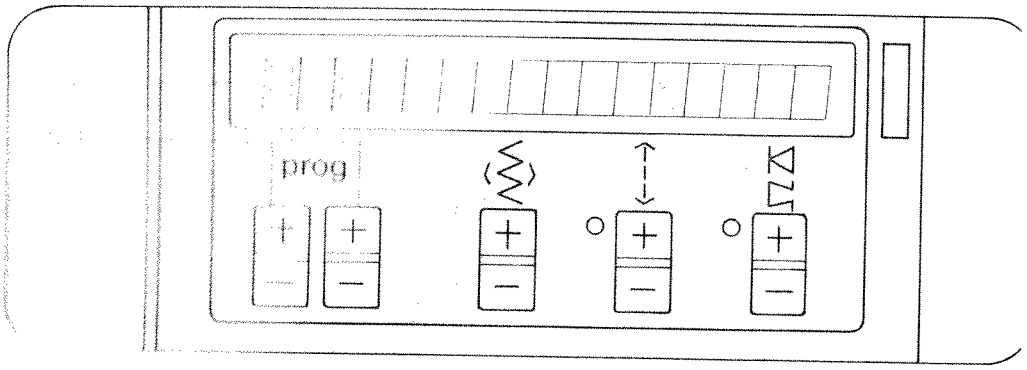

Program selection:
When the Creative is switched on, program -00- appears in display 120.
Enter the required number in program display 120, using programming keys 121. The alphabet and number symbols are selected with the left key, while letters and numbers are selected with the right key.

Stitch width setting:
The stitch width ranges from 0 to 6 mm.
Key 107 has 3 functions:
1. Selection of stitch width for the respective program.
2. Selection of the size of letters and numbers.
3. Straigh-stitch needle position for programs 01 and 03 (13 positions).

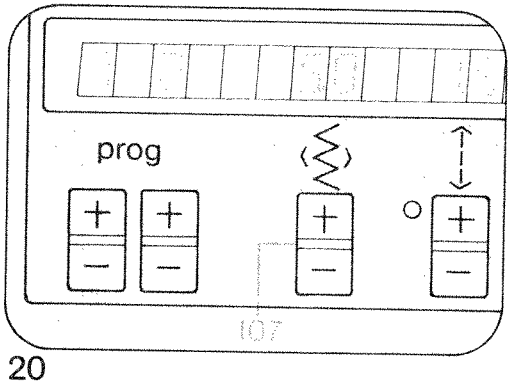

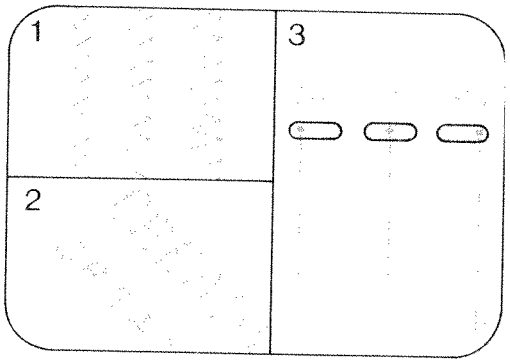

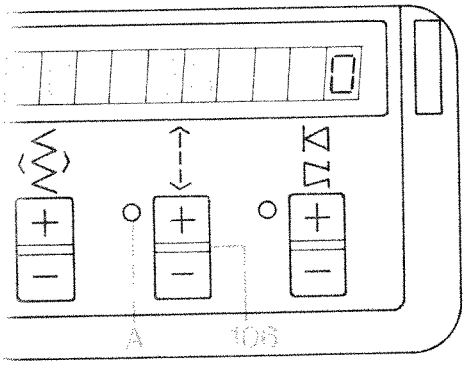

2

Stitch length and pattern length setting:
Key 106 has two functions:

1. Selection of stitch length for programs for which display A does not light up. The stitch length ranges from 0 to 6 mm. For some of the programs the stitch length is limited.
2. Selection of pattern length for programs for which display A lights up. The pattern length is indicated in mm and is limited in different ways.

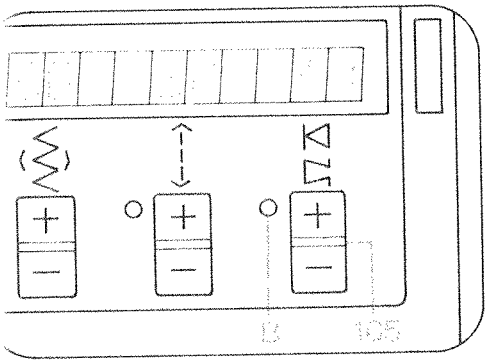

1 2

Balancing out and pattern length setting:
Key 105 has two functions:

1. Adjusting the reverse stitch length in a pattern (for balancing out, see page 22) in programs for which display B does not light up.
2. Selecting the pattern length in mm while the stitch density remains the same in programs for which display B lights up.
   The stitch length set determines the maximum pattern length.

Balancing out or adjusting the reverse stitch length

1. The balancing-out key is used to adapt the stitch density in the buttonhole seam as well as the length of this seam (program 13). With this key set at – the stitch density in the buttonhole seam increases and the seam length decreases.
   With this key set at + the stitch density in the buttonhole seam decreases and the seam length increases.
   The length of the reverse stitches can be adjusted from –7 to +7, the normal setting being 0.

2. **Adjusting letter and number combinations:**

   Combination: SURFEN

   Adjusted by +3: SURFEN

   Rule: If the pattern or program entered last is adjusted and entered with – or +, this adjustment is applied to the entire program combination.

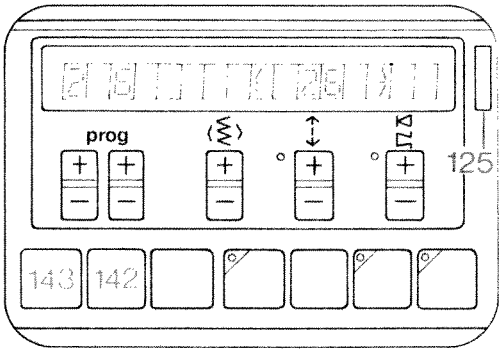

progr.:

30	32	24
26	22	26
26	22	26

Memorizing program combinations:

Compiling combinations out of programs 00 to 49 and with letters and numbers.
The Creative computer has a MEM-memory. For a program combination up to 36 letters and numbers can be stored consecutively. It is also possible to store up to 12 programs out of the series from 00 to 49 in the MEM-memory. Letters and numbers can be combined with programs 00 to 49.
Memorizing: Begin by selecting the MEM-memory with the ***left key 121:***
The MEM-memory is empty if no code number appears in display 104.
Then select the programs, letters or numbers singly with programming keys 121 and enter them in the memory by pushing key 143. The program numbers, letters or numbers appear in display 104. The programs can be varied in length and width before they are entered.
The numbers and letters in a program combination can be sewn in one size only. Their size is determined by the size setting of the last letter or number entered. If the computer accepts no further entries, it is exhausted.

Verification of a program combination in the display
The programs memorized can be verified one after the other in the display by pushing key 125 repeatedly. When you depress the foot control the machine switches to the beginning of the pattern combination.

Symbol $\{$ to the left of the code number displayed indicates the beginning of a pattern combination.

Symbol $\}$ to the right of the code number displayed indicates the end of a pattern combination.

Cancelling a program combination:

"Corrector" key 142 has two functions:

1. When this key is pressed the last program $\}$ in a pattern combination appears in the display.
2. When key 142 is pressed again the program stored last of a pattern combination is cancelled. Press key 142 repeatedly until the entire pattern combination has been cancelled.

Repeating program combinations:

"repeat" key 141 has two functions:

1. Returning a program combination to the starting position.
2. Repeating selected program combinations after other programs have been sewn in the meantime.

Twin-needle sewing:

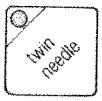

Key 129 "twin needle" must be pushed in. Display A lights up, and the stitch width is limited to 4 mm. Again push key 129 to switch off indicator light and function.

Pattern start setting:

1. Push ***"pattern start" key 128.*** A pattern in progress is returned to the starting point.
2. The last program in a combination appears in the display.
3. Length programming in program 13 is cancelled.

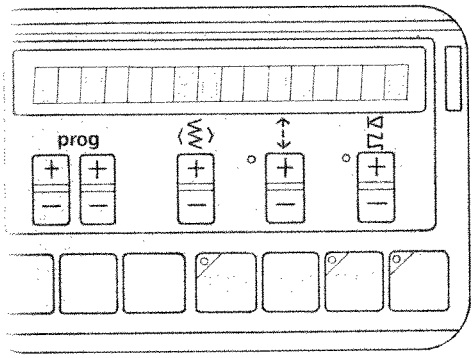

27 29

Single pattern setting:

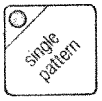

Push ***"single pattern" key 127.***
Display A lights up. The machine sews a program or a program combination and ties off beginning and end of the seam.
If the key is pressed while sewing is in progress, the machine completes the program and ties off the seam.

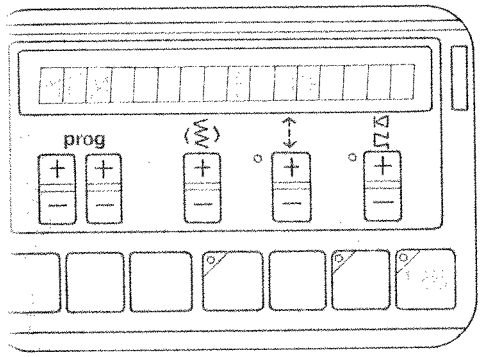

Pattern mirroring:

Press ***"pattern mirroring" key 126.***
Display A lights up. The program selected is mirrored.
Programs can also be entered in a combination for mirroring. When key 141 is pressed beforehand, the pattern combination is mirrored.
Again push key 126 to switch off display and function.

Progr.

23

34

49

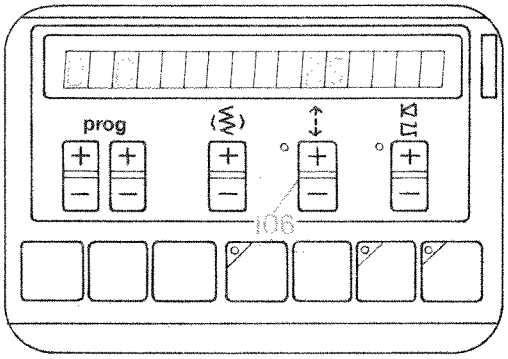

Straight-stitch sewing:
Program 00 is straight-stitch sewing with the needle in its central position.
Set the desired stitch length by key 106.
Program 01 is straight stitching with the needle in its left position. With key 107 the needle position can be varied in 13 steps from left to right.

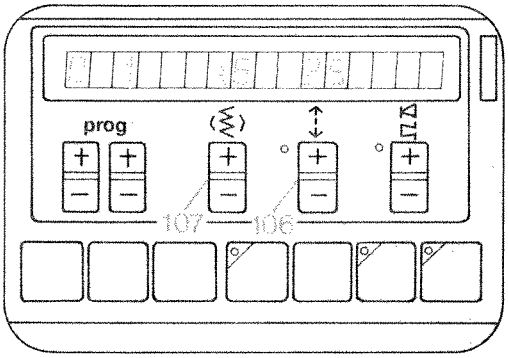

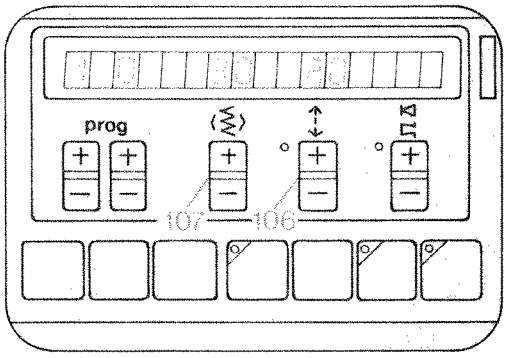

Zigzag sewing:
Program 10 is zigzag sewing with the needle in its left position.
Program 11 is a zigzag seam made with the needle in the right position. With key 107 the stitch width can be set between 0.5 and 6.0 mm. Set the desired stitch length with key 106.

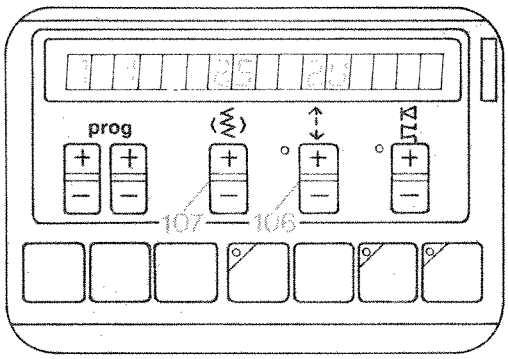

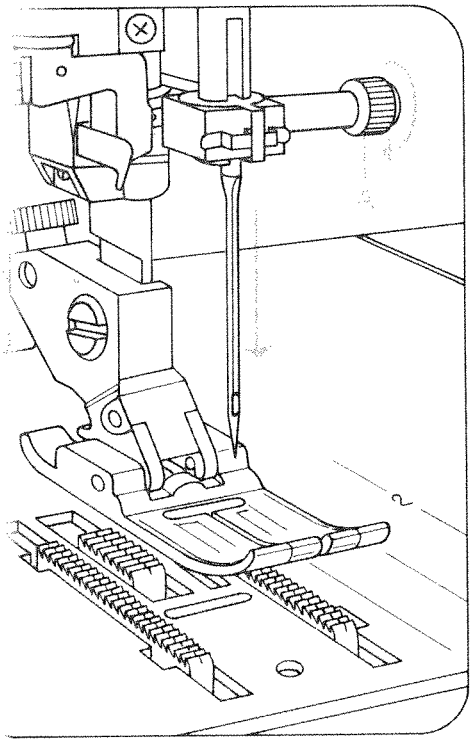

Changing the needle (System 130/705 H):
● *Switch off master switch 108.*
Loosen screw A. Take out the needle. Push the new needle up as far as it will go (flat side facing the back). Tighten the screw.

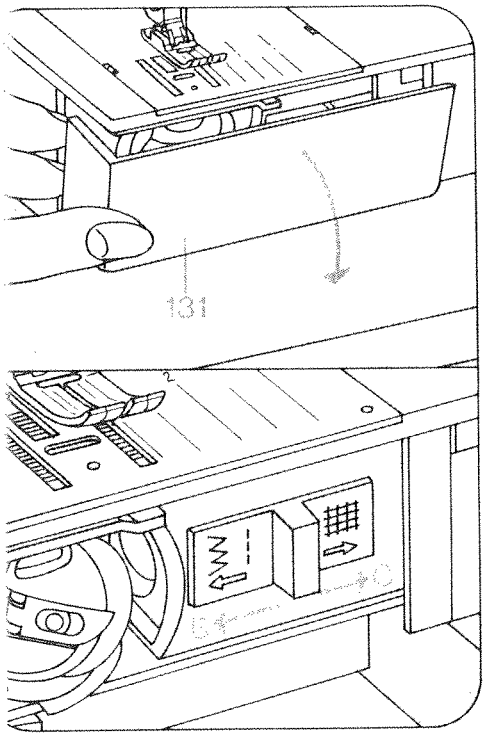

Dropping the feed dog:
Open free arm cover 131. Push the drop-feed control toward C (feed dog dropped) or toward B (sewing position).

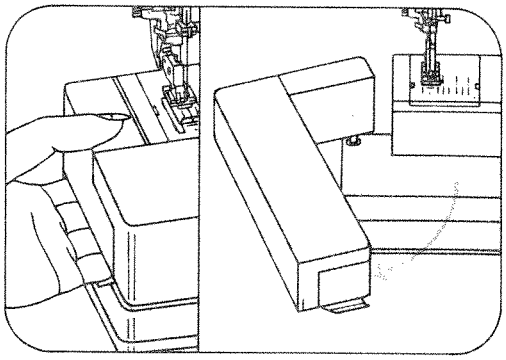

Reach under the work support and swing it out toward the left.

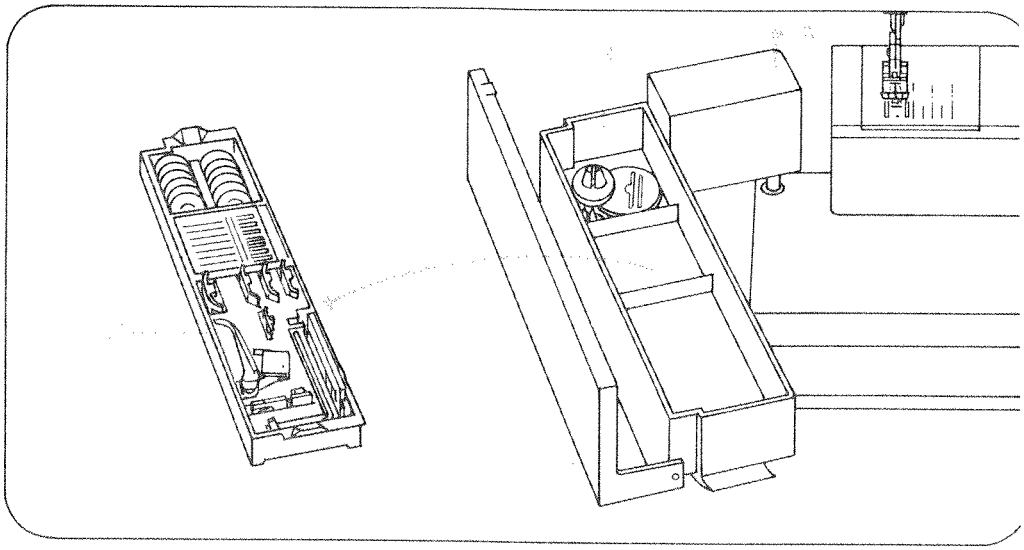

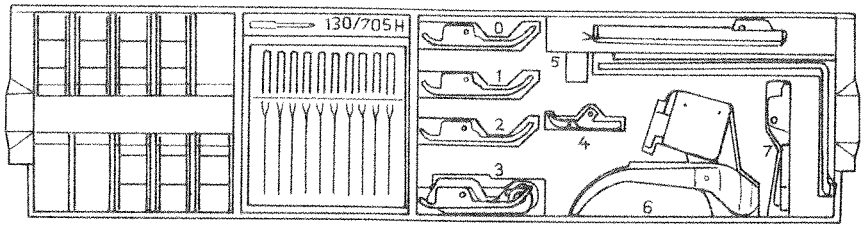

Detachable work support and accessories:
The work support can be lifted out (A). Open its lid and take out accessory box C. Underneath the box is an accessory compartment B. Illustration D shows how to arrange sewing feet, needles and bobbins in the accessory box.

Sewing feet (normal accessories)

0 Ordinary sewing foot
1 Fancy-stitch foot, with dual feed
2 Fancy-stitch foot, without dual feed
3 Blindstitch- and overlock foot
4 Zipper- and edge-sewing foot
5 Buttonhole foot
6 Darning foot
7 Hemming foot
8 Edge guide

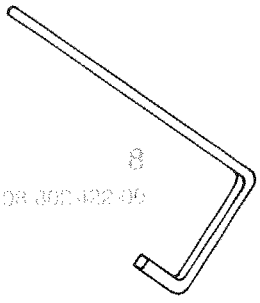

8
98-802-422-00

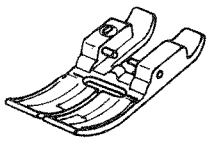

0
98-694-816-00

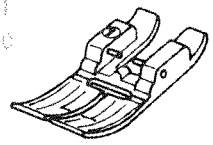

1
98-694-814-00

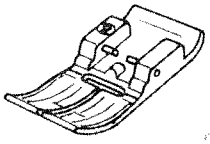

2
98-694-897-00

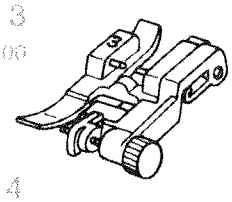

3
98-694-890-00

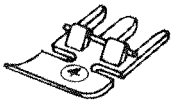

4
98-694-864-00

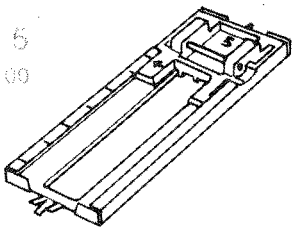

5
98-694-882-00

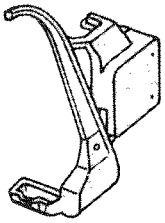

6
98-035-860-91

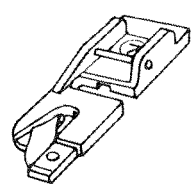

7
98-694-818-00

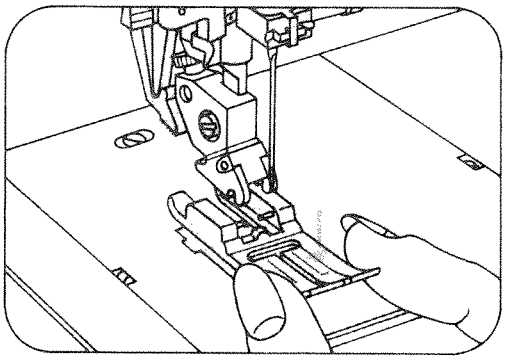

Changing sewing foot:
● *Switch off master switch 108.*
Hold sewing foot at front and push down to disengage foot.

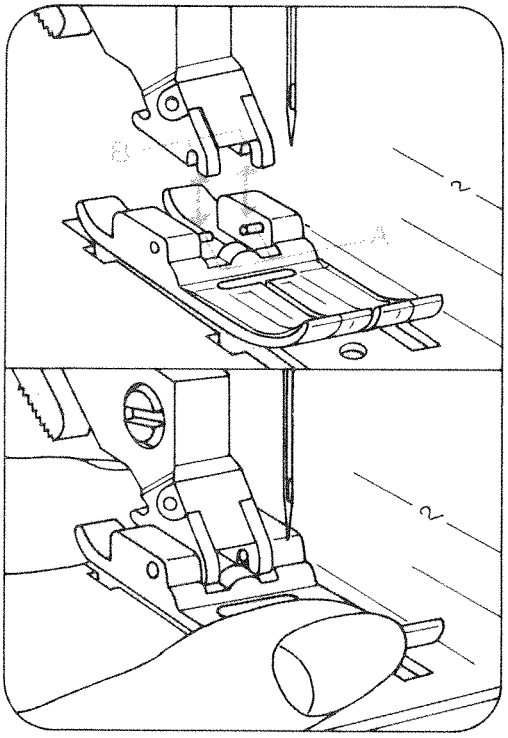

Fitting sewing foot: Lower lifting lever and locate foot so that pins A enter grooves B.

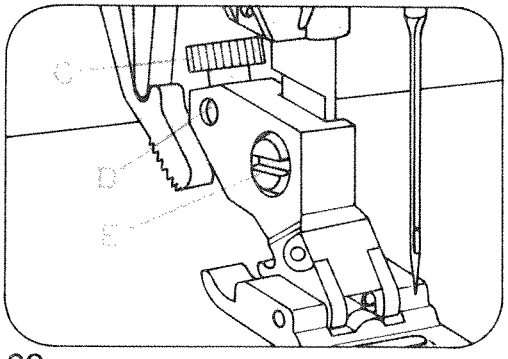

C and D are for securing accessories. E is the sewing foot screw.

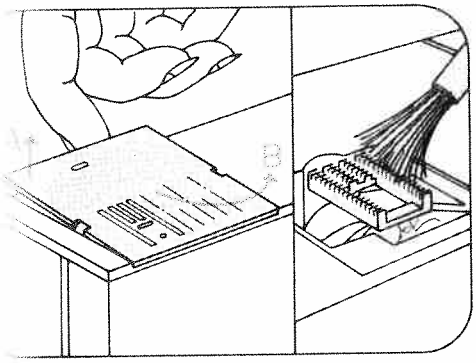

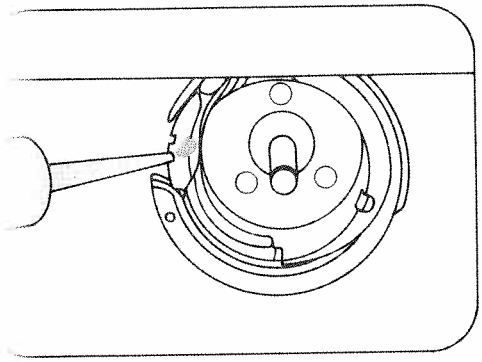

Cleaning and oiling

● *Pull out the mains plug.*

Tilt the needle plate up at the back (A) and remove it (B). Clean the feed dog and the parts in the vicinity of the sewing hook with a soft brush. Clean the bobbin thread monitor as instructed on page 35. Only apply a drop of oil in the hook raceway from time to time.

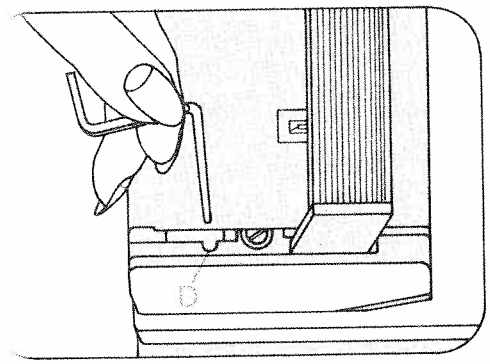

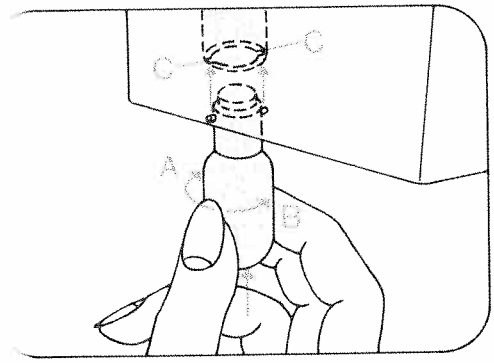

Changing the light bulb:

● *Pull out the mains plug.*

Close the hinged top cover and swing up the carrying handle. Insert the edge guide into cutout D, push down the lamp housing and hold it there. Turn the light bulb towards A and take it out. Insert the new bulb so that its pins enter slots C. Push it up and turn it towards B. Pull out the edge guide.

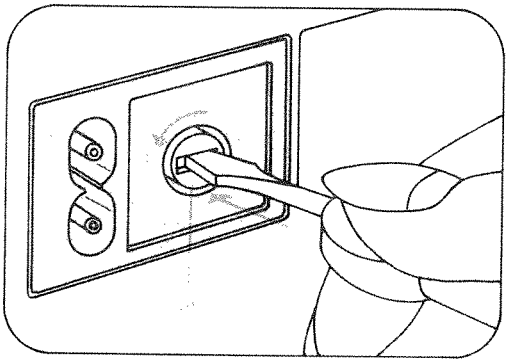

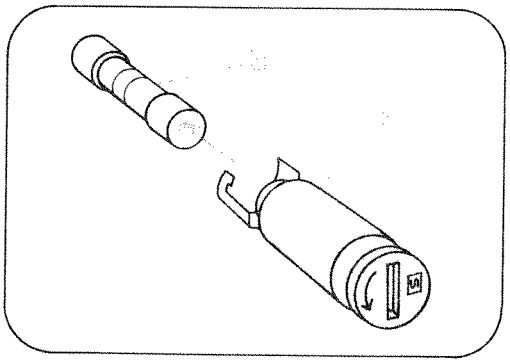

Changing the fuse
Pull out the mains plug. Turn fuse holder A left a quarter turn with a screwdriver, release it and take it out. Pull out fuse B. Insert a new fuse in the holder, replace the holder, push it in with the screwdriver, then turn it right a quarter turn. (The fuse type is F2A.) 110-volt machines have no fuse.

Important

When the machine is switched on by pushing the master switch the sewing light goes on.
When the machine is switched off by pushing the master switch, pulling out the mains plug or by power failure the program memory in the computer is retained by batteries.
When the machine is switched on again program 00 (straight stitching with the needle in its central position) appears in the display. Program combinations remain memorized.
If a program is entered during sewing, this will not become effective until the machine has stopped and the foot control is pressed again. Stitch length and stitch width can be changed during sewing.
For bobbin winding disengage the sewing mechanism. Make sure you re-engage the sewing mechanism after you have finished winding.
The electronic components in the machine will warm up during operation. This is quite normal and has no negative implications.

Special accessories

The special accessories listed below are intended for special sewing jobs. They can be obtained from your dealer at an extra charge.

Accessories without part numbers are in preparation and not yet available.

Accessory	Part No.	Sewing Operation
Appliqué foot	93-042941-91	For appliqué work
Binder (remove sewing foot holder)	98-053484-91	For binding edges with tape
		For cording work (needle size 80, for fine cording needle size 70)
Cording foot, 5 grooves (twin needle with 1.8–2.5 mm needle gauge)	93-042950-91	
Cording foot, 7 grooves (twin needle with 1.4–1.8 mm needle gauge)	93-042953-91	
Cording blade (2 ea.)	93-035952-45	
Fringe sewing foot	93-042943-91	For sewing fringes and for basting
Straight-stitch foot	98-694821-00	For topstitching and sewing very delicate and soft fabrics (silk jersey, etc.)
Needle plate with round needle hole	98-694822-00	
Felling foot, 4.5 mm	93-042946-91	For felled seams
Felling foot, 6.5 mm	93-042948-91	
Shirring foot	93-036998-91	For shirring valances
Single-needle cording foot	93-036915-91	For single-needle cording
Eyeletting plate	93-036975-45	For eyeletting
Hemmer, 4 mm (for dual feed)		For hemming edges
Knit-edge sewing foot	93-042957-91	For sewing knitted fabrics

Fault finding

Cause:	Remedy:
1. Machine skips stitches	
Needle not inserted correctly.	Push needle up as far as it will go, its flat shank side facing toward the back.
Wrong needle used.	Insert system 130/705 H needle.
Needle bent or blunt.	Insert new needle.
Machine threaded improperly.	Check threading.
Needle too thin for thread used.	Insert thicker needle.
2. Needle thread breaks	
For any of the above reasons.	See par. 1 above.
Thread tension too strong.	Regulate thread tensions.
Poor-quality or knotty thread used, or thread that has become too dry by excessive storage.	Use only good-quality thread.
3. Needle breaks	
Needle not pushed up as far as it will go.	Insert new needle and push it up as far as it will go.
Needle bent.	Insert new needle.
Needle too thin or too thick.	Refer to needle table.
Needle bent and strikes needle plate because work is pushed or pulled.	Let machine feed the work alone. Only guide the material lightly.
Bobbin case improperly inserted.	When inserting the bobbin case, push it in as far as it will go.
4. Seam is not uniform	
Tension out of adjustment.	Check upper and lower tensions.
Thread too thick, knotty or hard.	Use first-class thread only.
Bobbin thread wound unevenly.	During bobbin winding, do not hold thread in hand, but pass it through the bobbin tension stud.
Kinks appear on top and bottom of material.	Thread machine properly and check both tensions.

Cause:	Remedy:

5. Machine feeds irregularly or not at all

Lint has accumulated between tooth rows of feed dog.	Remove needle plate and clean out lint.
Feed dog dropped. (Drop-feed control is at right).	Flick drop-feed control to the left.

6. Machine runs with difficulty

Thread ends in hook raceway.	Remove thread ends and put a drop of oil into hook raceway.

7. Electronic bobbin thread monitor does not work

Thread ends and dirt have collected in the free arm cover over the indicator lamp, in the hook raceway, in the bobbin case, behind the hook and on the second indicator lamp to the right behind the hook.	Remove thread ends and dirt. Special care should be taken in the area round the second indicator lamp.

8. Machine does not sew the program entered

Switch the machine off, wait about 30 seconds, then switch it on again. Again enter the desired program.

9. Failure of machine programming function

If you find that it is not possible to program the computer although if is not filled up, the machine must be switched off. Press key 142 "Correction" after about 30 seconds, hold it down and switch the machine on again by actuating main switch 108. Release button 142.
By means of this procedure the contents of the MEM-memory has been fully erased. Required program sequences and patterns must be entered once more.

10. The sewing lamp lights up, but the machine does not run

Fuse ist faulty.	Insert new fuse.

Important:

Before exchanging either sewing foot or needle, switch off master switch 108.
Never run a threaded machine unless there is a piece of fabric under the sewing foot.
If you have to leave the machine, even for a short while, be sure to switch off the master switch. This is particularly important when children are around.

Index

A

Appliqué work 61
Assembly and serging seams 89
Attaching lace 89

B

Balancing the density of buttonhole seams 99
Balancing out letters and numbers 72
Basting 76
Binding edges 94
Blind stitch 95
Buttonholes 99–101

C

Changing the needle position 77
Changing the buttonhole stitch length 100
Changing the stitch length 67
Changing the stitch width 67
Closed overlock stitch 89–90
Cording 58–59
Correcting program entries 71
Correcting programs stored 65
Correction of the buttonhole 100
Cross stitches 48–50
Cutting buttonholes open 101

D

Darning torn fabrics 98
Darning with straight stitch and wool 96–98
Dashes 70
Dot quick selection 69
Dots and dashes 70
Dual feed 75

E

Edge binding with the binder 94
Elastic stitch 91
Elastic straps 91
Eyelet embroidery 52

F

Fabrics 7
Fagotting stitch for corsetry 8
Fringe seams 5

G

Gathering with the shirring foot 8

H

Hemstitching 5
Honeycomb stitch 91–9
Hyphens 7

I

Inserting lace 5
Inserting patches 9

L

Lap-seam felling 8
Lengthening patterns at the same stitch density 6
Letters and numbers in differenz sizes 7
Lingerie buttonholes 9
Linen embroidery 5
Lycra stitch 8

M

Making tailor's tacks 7
Multi-colour embroidery 4

N

Narrow pleats 5
Needle chart 10

O

Ornamental borders 42–4
Ornamental seams on leather 5
Overlock stitch with edge-thread effect 9

P

Pattern mirroring 66
Programming embroidery stitches and monograms 68–71
Programming letters and numbers 68
Programming names together with embroidery stitches 71
Programming possibilities 40
Programming the computer 64

Q

Quilting 63

R

Recommended machine settings 41
Roll hemmer 93

S

Securing hems with the twin needle 92
Selecting the MEM-memory 64
Serging seams 87–89
Serging with zigzag stitch and overlock foot 87
Sewing dots 69
Sewing fancy seams with the twin needle 46
Sewing in zippers 102
Sewing letters 68
Sewing monograms 47
Sewing neck openings 89
Sewing numbers 68
Sewing on buttons 101
Sewing with straight, utility and stretch stitches 73
Shell edging 60
Shirring with elastic thread 84
Shirring with straight stitch 83
Single buttonhole 100
Single pattern 65
Smocking with elastic thread 86
Spacing between words 70
Straight stitch
Stretch triple straight stitch
Stretch triple zigzag stitch

T

Tips for ambroidering and sewing
Topstitching collar points
Topstitching with the twin-needle
Top-stitch seams sewn with two needle threads
Top-stitch seams with buttonhole thread
Triple-fancy-stitch seams
Twin needle 58 +

V

Verifying the programs stored

W

Writing texts

Z

Zigzag stitch
Zippers for ladies' slacks 1

Ideas for embroidering and sewing with the Pfaff Creative 1371

Congratulations!

Your new PFAFF Creative makes you the owner of one of the world's finest sewing machines. It is a high-quality machine possessing a large number of outstanding features which other sewing machines do not have. From the vast range of sewing potentialities offered by this machine we have compiled various ideas and suggestions for you. These are divided into three groups, as follows:

1. *Embroidery-stitch program*
2. *Programming embroidery stitches, numbers and letters*
3. *Straight-stitch, zigzag-stitch and utility-stitch programs as well as buttonhole program*

No doupt, you will have a few questions regarding the sewing problems encountered in your capacity as a Creative fashion designer. Please feel free to contact your nearest PFAFF dealer at any time. He will be glad to help you.

When you have studied the operating instructions we recommend that you read this section just as thoroughly. This will enable you to make full use of the numerous application possibilities afforded by this machine. We wish you many hours of enjoyable and successful sewing and creative needle work.

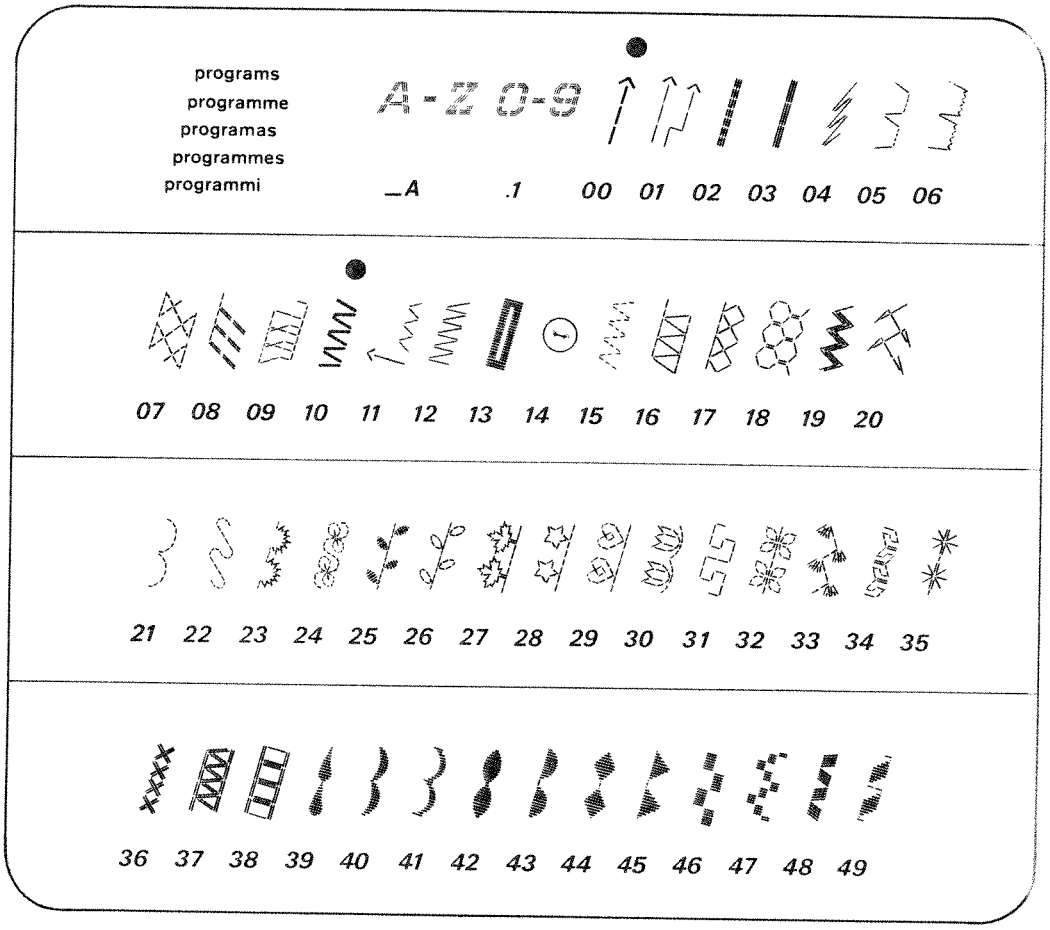

Programming possibilities

- Straight-stitch, zigzag-stitch and utility-stitch programs from 00 to 20
- Embroidery-stitch programs from 21 to 35 and from 39 to 49
- Buttonhole program Lingerie buttonhole (Program 13)
- Button sewing program (Program 14)
- Cross-stitch program (Program 36)
- Hem-stitching programs (Programs 37 and 38)
- Alphabet program Block letters from A to Z
- Numbers from 0 to 9

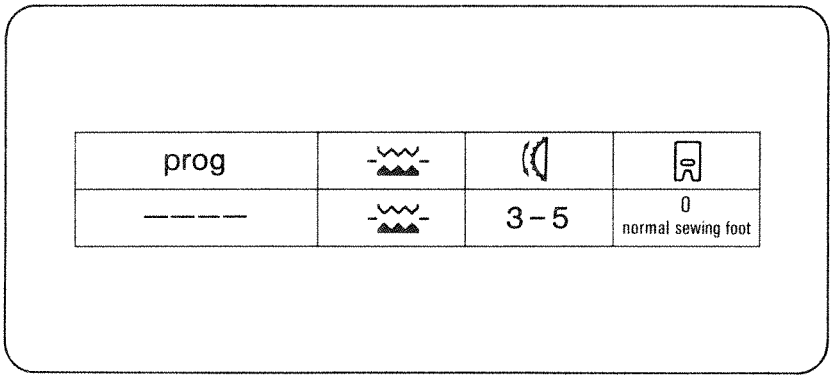

Machine settings recommended

The box above every description of the sewing jobs illustrated on the following pages contains the machine setting recommended and the sewing foot best suited for the respective sewing job. The individual symbols atand for:

prog	e.g. straight stitch	———
	Dual feed engaged (if existent)	
	or	
	Dual feed disengaged (if existent)	
	Recommended needle thread tension, e.g.	3-5
	Recommended sewing foot, e.g.	0 Ordinary sewing

Embroidery-stitch program

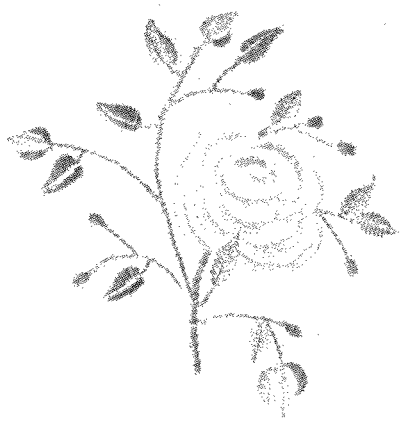

Fig. 1 Multi-colour embroidery

prog			
04 42 43 45		-3+	2

First workstep: stems
- Program 04
- Change stitch length to 2.5 mm.
- Follow traced lines with a program 04 seam

Second workstep: leaves
- Program 43
- Change stitch width to 4.0 mm.
- Change pattern length to 25
- Push "single pattern" key.
- Needle in down position.
- Sew the leaf slightly curved, starting at th stem. Leave the needle down in the fabric, tur the fabric through 180° and sew the patter backwards. In this way, all leaves can be sew larger or smaller.

Third workstep: half flower
- Program 45
- Stitch width 5.0 mm
- Pattern length 20
- Push "single pattern" key.
- The tip of the pattern should contact the sten

Fourth workstep: flowers
- Program: 42
- Stitch width 4.5 mm
- Pattern length 20
- Push "single pattern" key.
- Sew the petals, including those of the half flowe

Fifth workstep: flower centre (dot)
- Program 42
- Stitch width 5.0 mm
- Pattern length: 50
- Push "single pattern" key.
- Sew flower centres (dots).

Some embroidery ideas:
(not described)

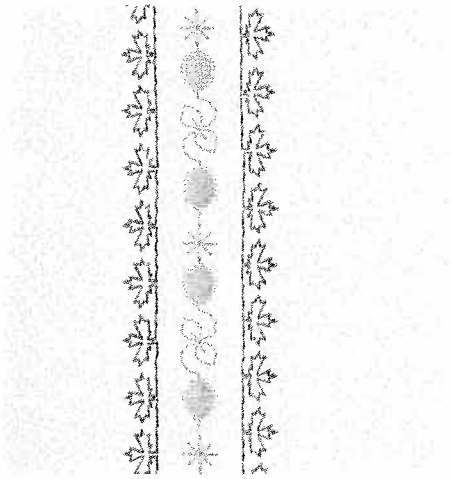

1

Ornamental borders

You can give free rein to your creativity by combining various patterns. The ornamental borders illustrated on this page and described below are intended as a stimulus to your imagination.

- For sewing ornamental borders we recommend using the fancy-stitch sewing foot No. 2.
- Place tissue paper under the fabric.
  This will help you to achieve better sewing results.

Border 1 *consists of the following programs:*

prog			
42 35 24 27		-3+	2

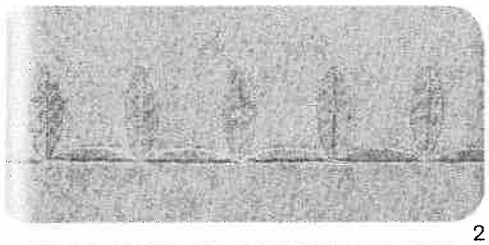

2

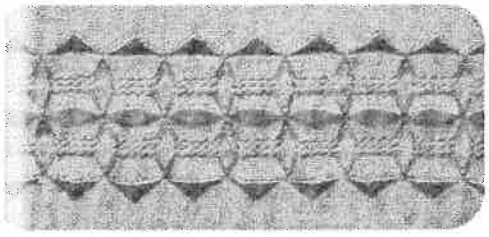

First workstep, middle motif

- Select program 42
- Stitch length 0.3 mm
- Pattern length 8.0
- Press program entry key 143
- Select program 35
- Press program entry key 143
- Select program 42
- Stitch length 0.3 mm
- Pattern length 8.0
- Press program entry key 143
- Select program 24
- Press program entry key 143
- Sew the stored program.

Second workstep, outer motiv

- Select program 27
- Sew the selected program along either side of the middle motif.

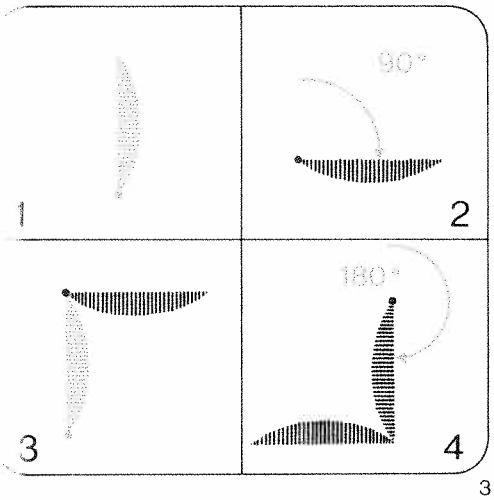

3

Border 2

prog			
43		-3+	2

- Select program 43
- Stitch width 4.0 mm
- Pattern length 25
- Press "single pattern" key
- Press "needle down" key.

Sew the selected pattern until the needle stops down in the material (1 in Fig. 3). Turn the material through 90° (2 in Fig. 3). Sew the pattern until the needle stops down in the material (3 in Fig. 3). Turn the material through 180° (4 in Fig. 3), then sew the pattern backwards, as shown in Fig. 2. Repeat these two sewing actions until the border is complete (Fig. 2).

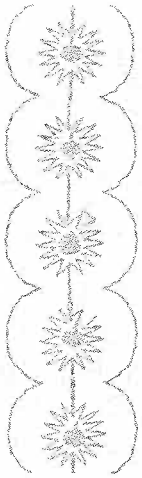

1

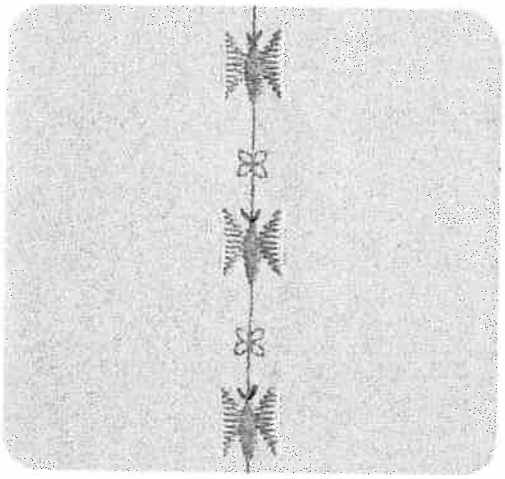

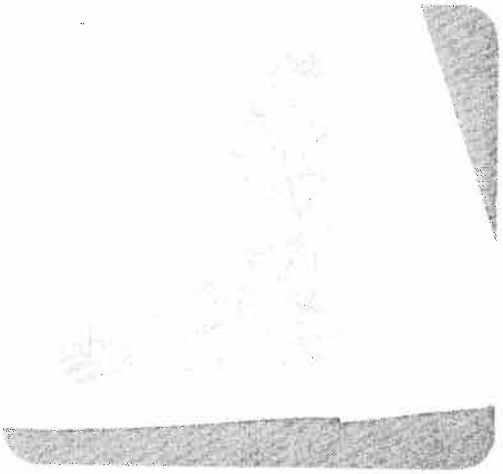

Border 1

prog			
23 21 42		−3+	2

First workstep, centre motif

- Select program 23
- Needle in down position
  Sew the programmed stitch pattern, as illustrated. Shortly before you reach the end of the seam, press the "tie-off/buttonhole" key. At the end of the pattern the needle remains down in the material. Turn the fabric through 180°.
- Sew the pattern backwards in the same way

Secound workstep, side motifs

- Select program 21
- Change pattern length to 18 mm (key 106)
  Sew the programmed stitch pattern along both sides of the centre motif. The second side motif can be sewn without turning the fabric by pushing the "pattern mirroring" key.

Third workstep, centre dots

- Select program 42
- Change stitch width to 4.0 mm
- Change stitch length to 0.25 mm
- Change pattern length (key 105) to 5.0
  Sew the programmed stitch pattern in the middle of the circles.

Some embroidery ideas
(not described)

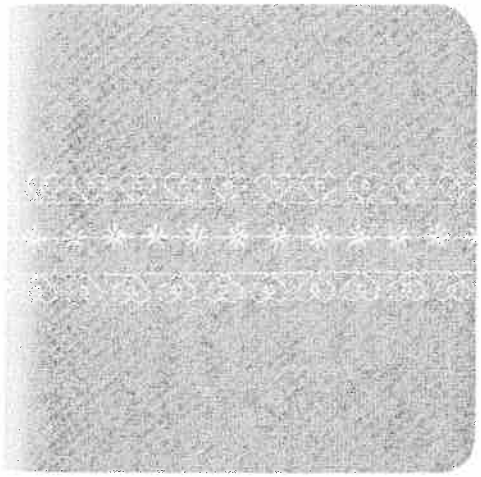

1

Border 1

prog			
29 35		-3+	2

First workstep, centre motif
- Select program 35
  Sew the programmed stitch pattern.

Second workstep, heart motif
- Select program 29
  Sew the programmed stitch pattern, stitching the straight-stitch seam along the centre motif.

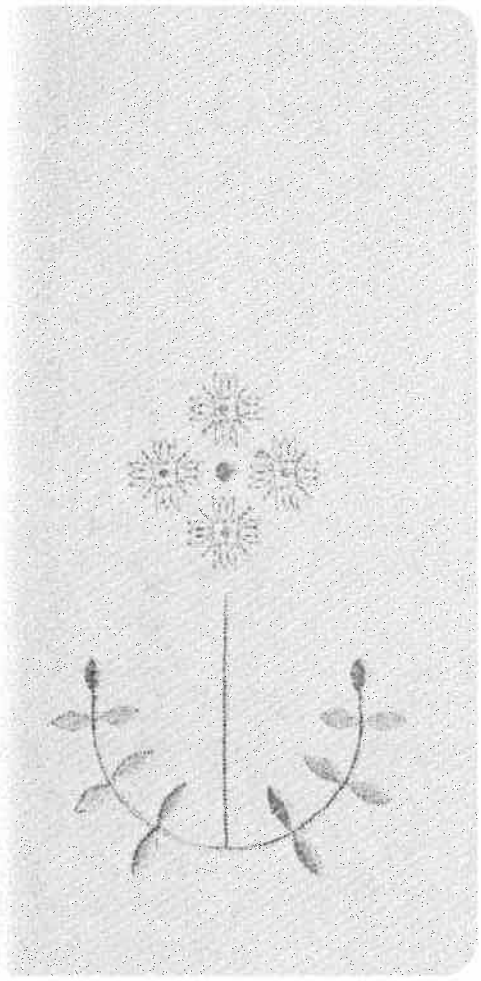

2

Border 2

prog			
04 30 42		-3+	2

Begin by tracing the pattern on a piece of paper, then transfer it onto the fabric.

First workstep, stems
- Select program 04
  and sew along the traced lines.

Second workstep, leaves
- Select program 42
- Stitch width 4.5 mm
- Pattern lengths 12 - 10 - 9.0 - 8.0
- Press "single pattern" key
- Sew the leaves, starting at the stem.

Third workstep, flowers
- Select program 30
- Press "single pattern" key
- Press "needle down" key

The flowers are produced by turning the fabric. Sew the programmed stitch pattern until the needle stops down in the material. Turn the fabric through 90°. Repeat this process three times.

Fourth workstep, flower centre
- Select program 42
- Stitch width 5.0 mm
- Stitch length 0.25 mm
- Pattern length 5.0
  Sew the programmed stitch pattern in the middle, as illustrated.

Fifth workstep, bud centre
- Select program 42
- Stitch width 2.5 mm
- Stitch length 0.25 mm
- Pattern length 3.0
  Sew the programmed stitch pattern, as illustrated.

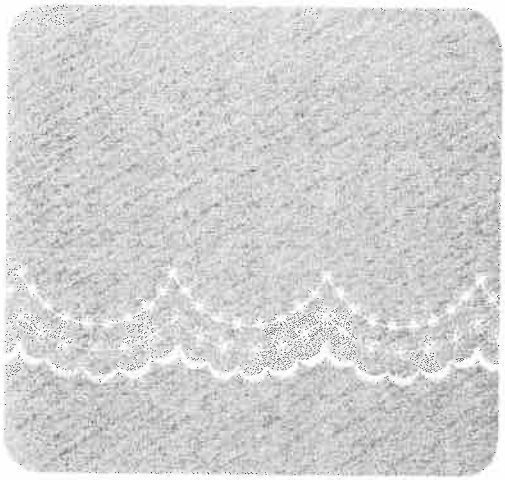

1

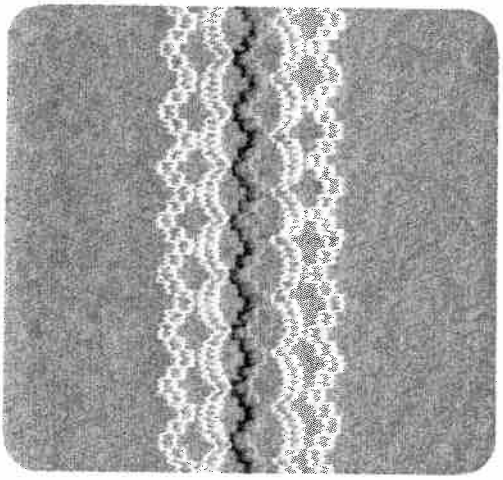

2

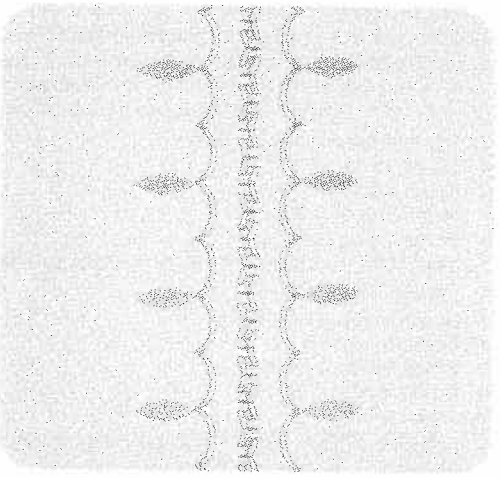

3

Border 1

prog			
40 32 35		3–5	2

When tracing the scallops make sure their size corresponds to the pattern length of the program selected. Try the pattern out on a fabric scrap first.

First workstep, outside edge
- Select program 40
- Stitch width 6.0 mm
- Pattern length 10
- Press "needle down" key
  Sew the selected stitch pattern along the pre-traced line.

Second workstep, centre motif
- Select program 32
- Press "needle down" key
  Sew the selected stitch pattern parallel to the stitch pattern sewn first, offsetting it by the width of the sewing foot.

Third workstep, innermost motif
- Select program 35
- Press "needle down" key
  Sew the selected stitch pattern along the stitch pattern sewn previously, following it again at sewing-foot width (Fig. 1).

Sewing fancy seams with the twin needle

prog			
Optional		3–5	2

Needle: twin needle, 1.6 mm gauge
Press: "twin needle" key.

Very attractive fancy patterns can be sewn with the twin needle. The left illustration shows some of the dainty patterns that can be produced with a little imagination.
Press the "twin needle" key; this limits the stitch width and prevents the needle from striking the needle plate.
For sewing, use two reels of thread of different colours. Place one reel on each reel pin and secure it in position with the corresponding unwinding disc. Place one thread to the right and other to the left of disc "C". Continue threading in the usual way, threading each needle separately.
See threading instructions on page 58.

Border 3
- Begin by sewing the centre motif.
- Then sew along the scallops at sewing-foot width.
- Finally sew the petal-shaped motifs at the scallop tips (Fig. 3).

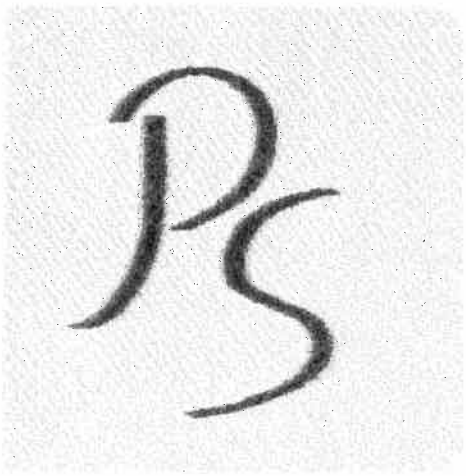

Sewing monograms with the embroidery foot

prog			
10 42		-3+	2

Thread: embroidering/darning thread

Clear-lined block letters or monograms made by combining different ornamental platterns can be sewn without any difficulty. Trace the monogram on paper first, then transfer it to the fabric. Having done so, follow the outlines with the programmed stitch pattern chosen.

To sew monograms on terry cloth, pin the paper pattern onto the fabric and sew along the traced outlines with a narrow zigzag stitch. Then sew over the contours of the monogram with the programmed stitch pattern chosen.

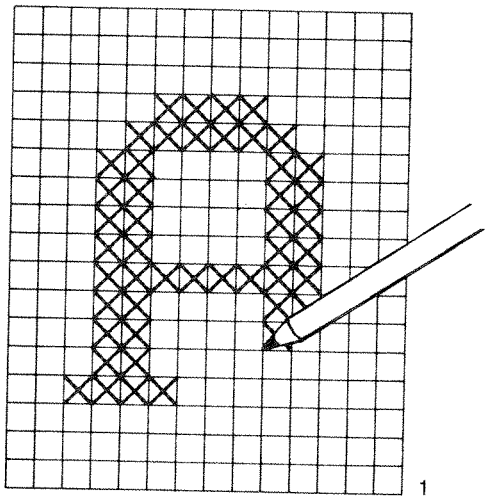

1

Cross stitches

If you have no cross-stitch pattern available, you can design and sew your own pattern.

- Draw the cross-stitch pattern on graph paper (see Fig. 1).
- Enter the number of cross stitches for every pattern sequence in the MEM-memory by pressing "program entry" key 143.
- If the stored program is no longer required, cancel it in the MEM-memory by pressing "corrector" key 142 (see page 65).
- Fancy-stitch foot No. 2 has red marking lines which make cross-stitch sewing easier for you. The crosswise lines in the foot indicate the pattern start.
- Let the left metal edge in the window of the foot run exactly along the line of the pattern sewn previously to avoid gaps occurring between adjoining patterns.

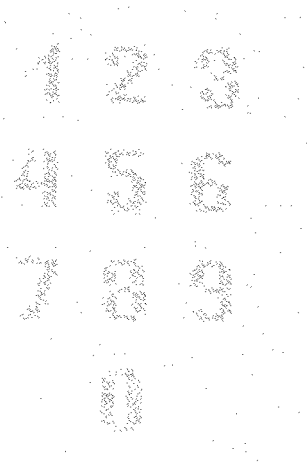

Some embroidery ideas
(not described)

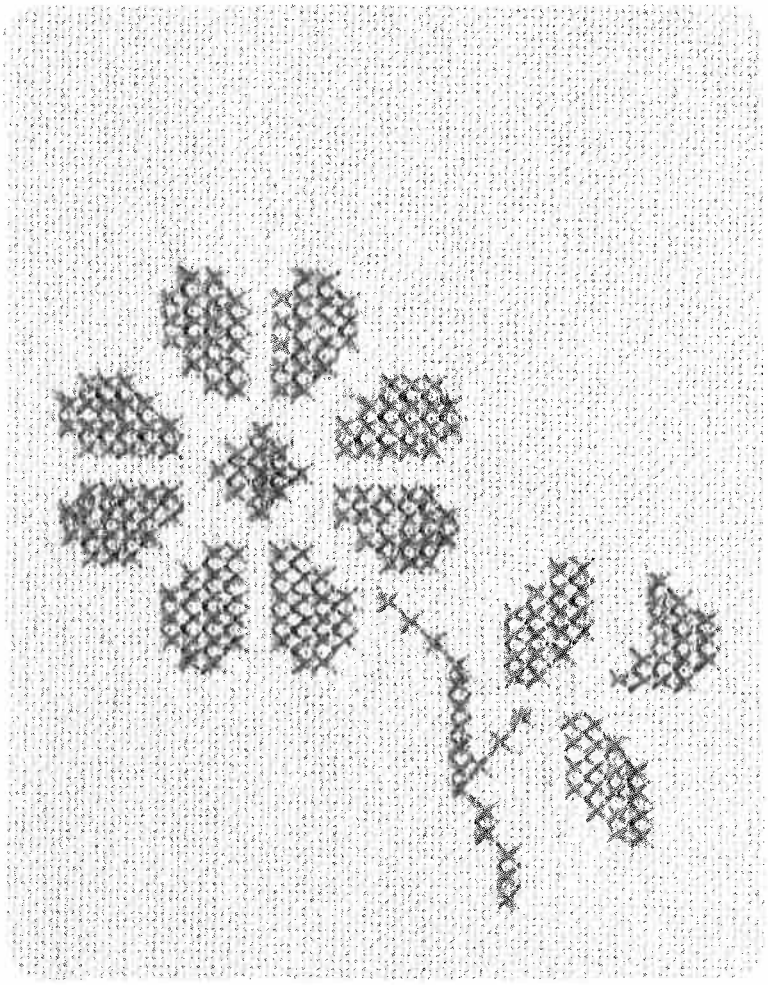

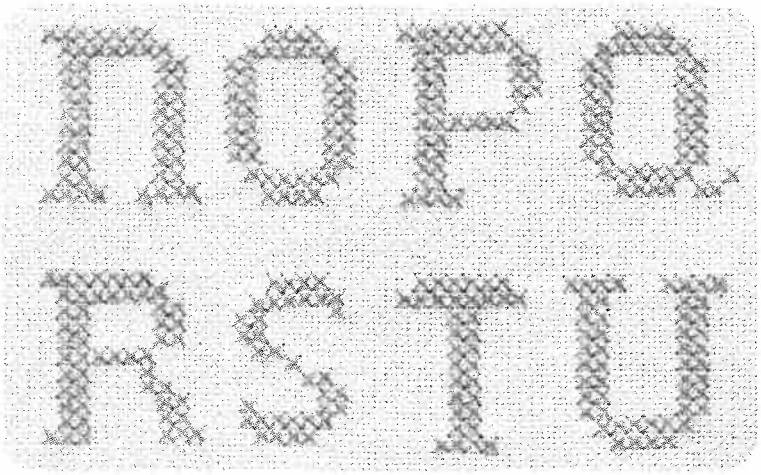

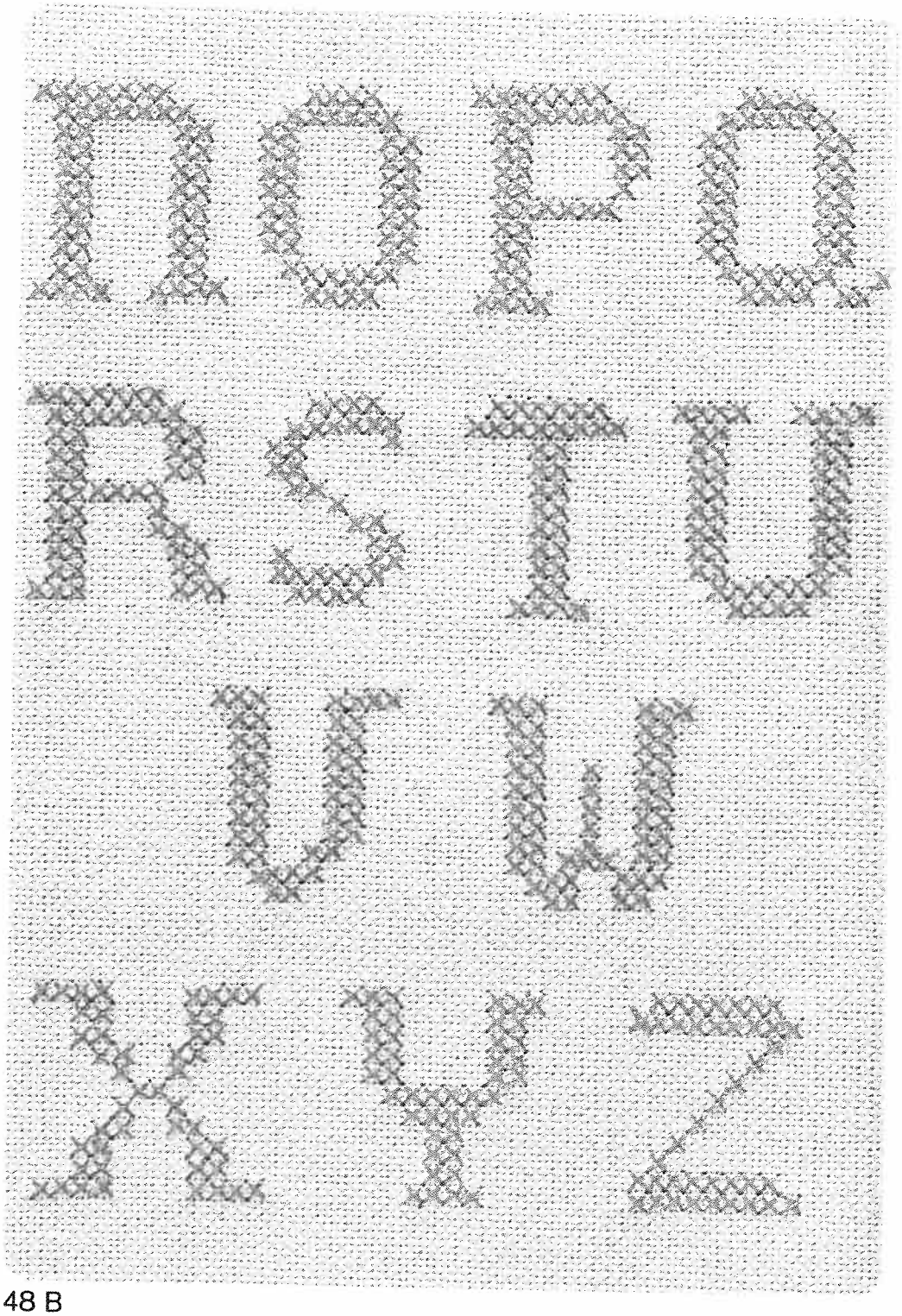

48 B

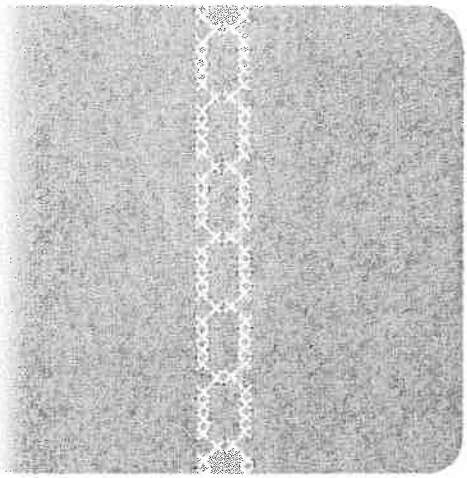

1

With the cross-stitch program you can sew many beautiful borders, monograms and other embroidery motifs.

Border 1

prog			
36 36ı		-3+	2

Enter the following programs in the computer by pressing the "program entry" key:

- 4 x 36
- 1 x 36ı pattern mirroring
- Sew the pattern along the traced line. At the end of the pattern, turn the material and sew back to the starting point, matching the patterns (Fig. 1).

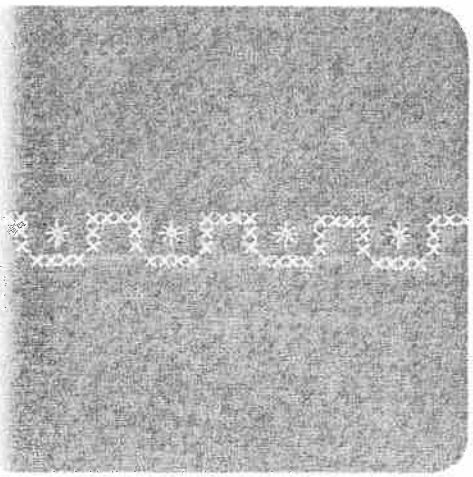

2

Border 3

prog			
36 36ı		-3+	2

First workstep, centre motif
Enter the following programs in the computer by pressing the "program entry" key:

- 1 x 36
- 1 x 36ı pattern mirroring
- Sew the pattern along the traced line.

Second workstep, outside edges
Enter the following programs in the computer:

- 4 x 36
- 2 x 36ı pattern mirroring
- Sew the pattern alongside the centre motif on the right and left (Fig. 3).

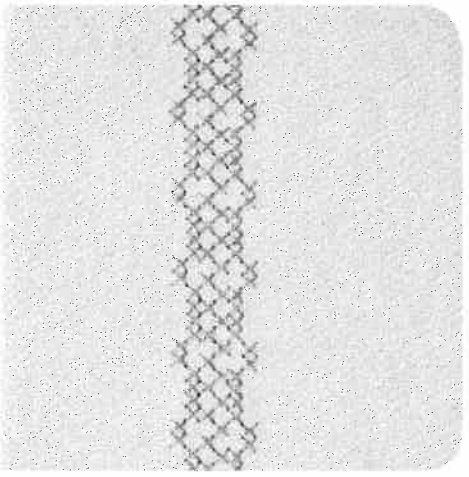

3

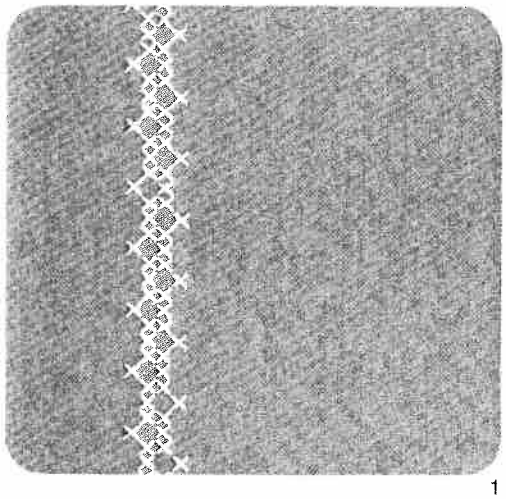

1

Border 1

prog			
36 36ı		-3+	2

Enter the following programs in the computer by pressing the "program entry" key:

- 1 x 36
- 3 x 36ı pattern mirroring
- Sew the pattern along the traced line. At the end of the pattern, turn the material and sew back to the starting point, matching the patterns (Fig. 1).

Border 3

prog			
36 36ı		-3+	2

First workstep, centre motif
Enter the following programs in the computer by pressing the "program entry" key:

- 2 x 36
- 2 x 36ı pattern mirroring
- Sew the pattern along the traced line.

Second workstep, outside edges
Enter the following programs in the computer:

- 1 x 36
- 1 x 36ı pattern mirroring
- Sew the pattern alongside the centre motif on the right and left at sewing-foot width (Fig. 3).

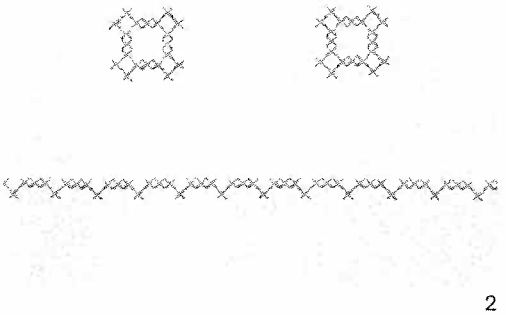

2

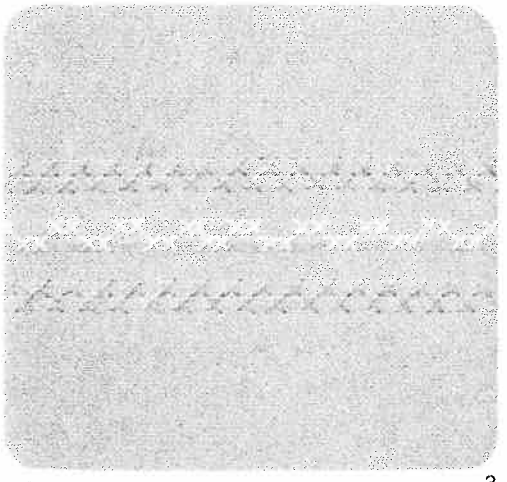

3

creative 1371

B

Instruction Book

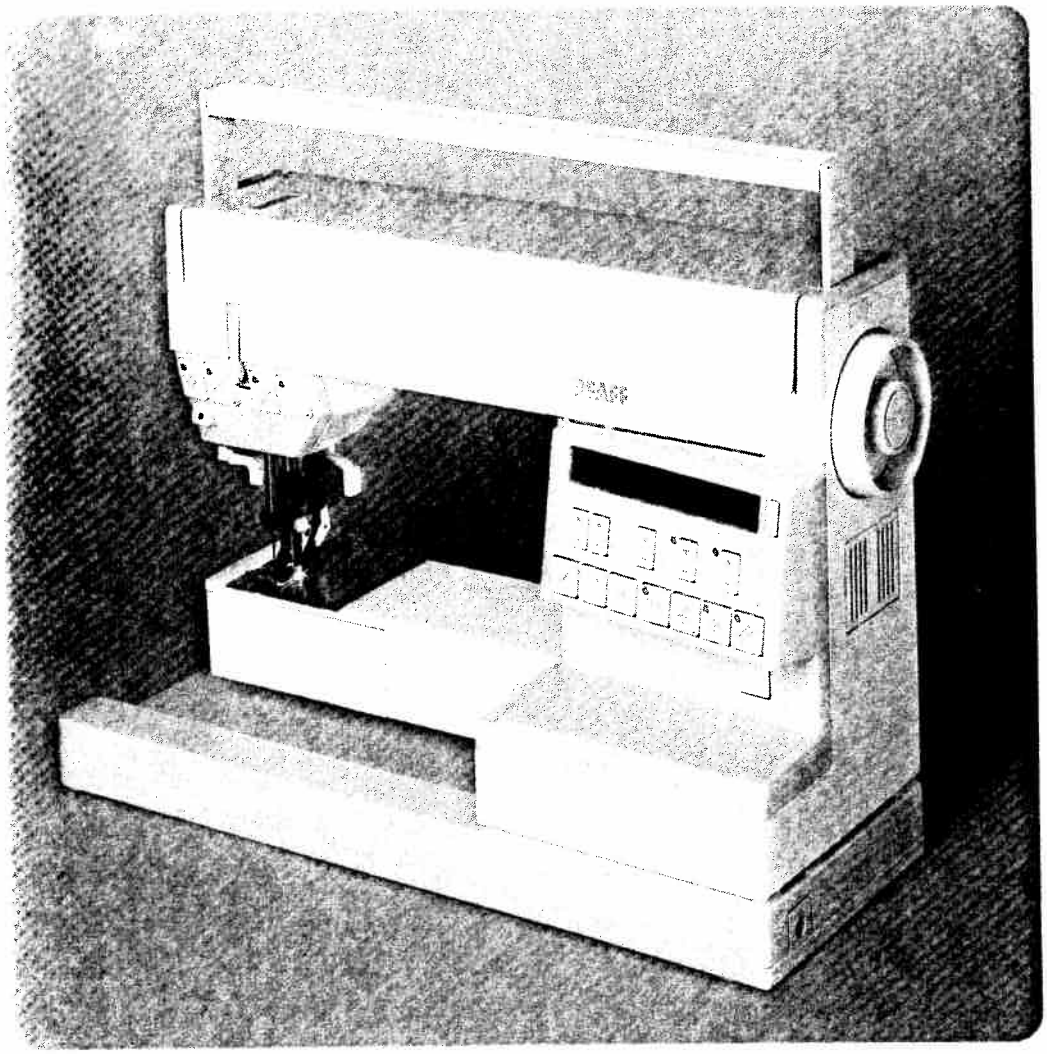

Linen embroidery

Plain embroidery on linen is a widely known and popular ornamentation. The patterns illustrated can be made on your Pfaff Creative in a very short time by combining all kinds of stitches.
Transfer the pattern illustrated onto the face side of the fabric either by ironing it on or with the aid of tracing paper.
Always place two sheets of tissue paper under the fabric during embroidering.

prog			
04 11 39		−3+	2

Thread: embroidering/darning thread

The motif in Fig. 1 is made up of the above-mentioned programs.

First workstep, stems
- Program 04
- Stitch length 2.5 mm
- Follow the pre-traced lines with a program 04 seam

Second workstep, leaves
- Program 39
- Stitch width 5.0 mm
- Press "single pattern" key
- Sew the leaf motifs slightly curved, starting at the stem.

Third workstep, eyelets
- Program 11 pattern mirroring
- Embroider eyelets (see page 52)

  Mark the position of the eyelet, then sew it in the middle of the flower (Fig. 1).

Some embroidery ideas: (not described)

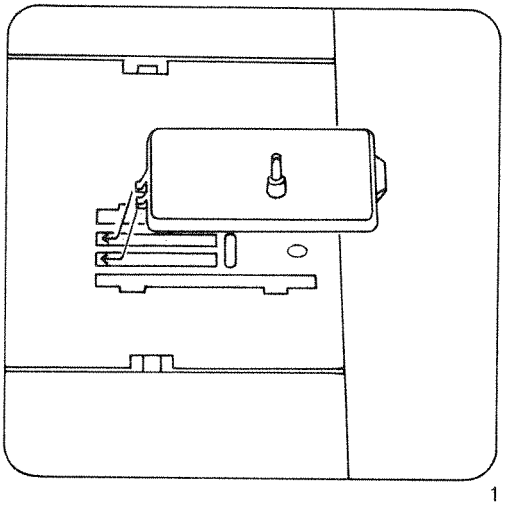

1

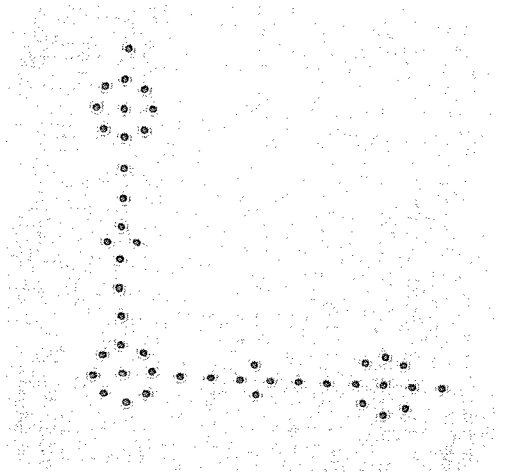

2

Eyelet embroidery with the eyeletting plate (special accessory)

prog			
11	—	2–3	Remove

Key: *pattern mirror*
Feed dog: *dropped*
Presser bar lifter: *in darning position (page 96)*
Sewing thread: *embroidering and darning thread*

Fitting the eyeletting plate: insert the plate with the double catch engaging behind the middle tooth row, place it over the needle plate and snap it into position (see Fig. 1).

Place the traced fabric tautly in an embroidering hoop. Cut one or two fibres in the fabric and push the fabric over the pin. The fabric must be tight against the pin all round. Draw the bobbin thread up and hold it for the first few stitches (placing presser bar lifter in darning position beforehand). Stitch around the cut with zigzag stitches, turning the hoop slowly clockwise at the same time. Finally, secure the stitches with a few straight stitches at the edge (Fig. 2).

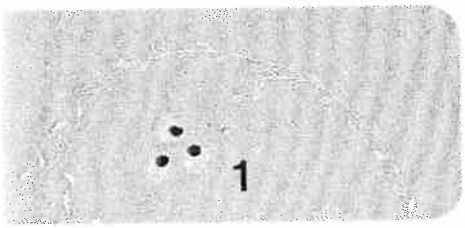

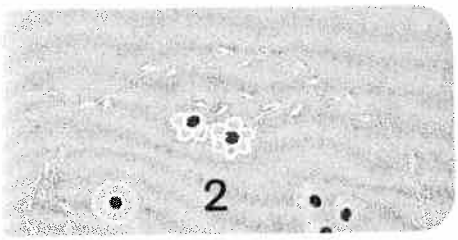

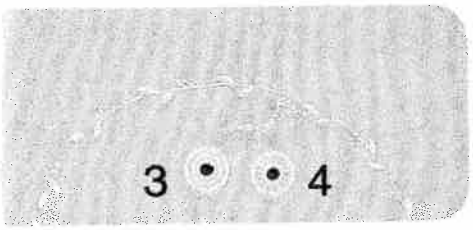

Ring of flowers

The illustration above shows a pretty ring of flowers. For this type of embroidery it is very important to guide the embroidery hoop evenly and steadily. Here are the instructions for sewing the different motifs:

Motif 1: **2 worksteps**

1st workstep: *program* *11*
mirror pattern
stitch width *2.0 mm*

2nd workstep: *program* *43*
stitch width *6.0 mm*

Motif 2: **2 worksteps**

1st workstep: *program* *11*
mirror pattern
stitch width *2.0 mm*

2nd workstep: *program* *41*
stitch width *6.0 mm*

Motif 3: **3 worksteps**

1st workstep: *program* *11*
mirror pattern
stitch width *2.0 mm*

2nd workstop: *program* *10*
stitch width *1.5 mm*

3rd workstep: *program* *11*
stitch width *2.0 mm*

Motif 4: **2 worksteps**

1st workstep: *program* *11*
mirror pattern
stitch width *2.0 mm*

2nd workstep: *program* *06*
stitch width *6.0 mm*

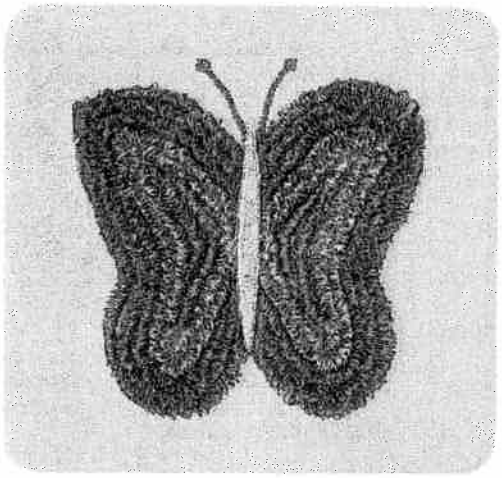

1

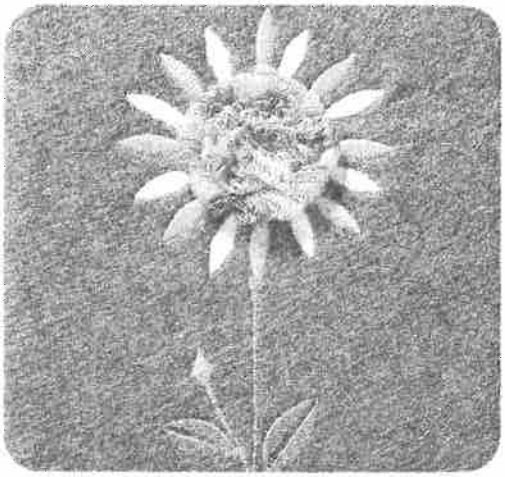

2

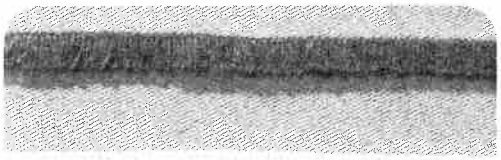

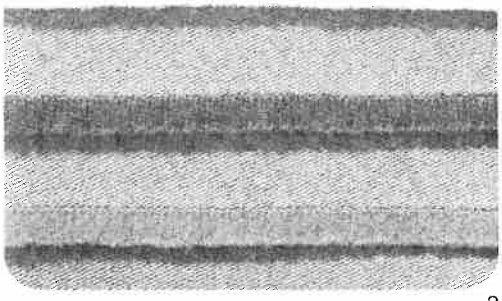

3

Fringe seams

Butterfly

Two worksteps are required for this:

First workstep (wings)

prog			
10		2–3	*

* Fringe foot

Stitch width: 1.5 mm
Stitch length: 0.5 mm
Fringe foot: (special accessory)

First workstep (wings)

First sew a fringe seam as a trial, using a piece of scrap material. During sewing, try different stitch lengths until you find the one most suitable. The wings are best sewn in circular seams working from the outside inwards.

Second workstep (body)

prog			
42		2–3	2

Pattern length: as required
Key: single pattern

Second workstep (body)

Sew the body as shown in the illustration (Fig. 1)

Third workstep

Finally sew the antennas with small zigzag stitches, adding the dots at their tips by sewing a program 42 stitch pattern (Fig. 1), using

- stitch width 4.0 mm
- pattern length 5.0

Flower

prog			
04 42 43		-3+	2

Mark out the pattern of the flower on the fabric. Sew the petals, stem and leaves as shown in the illustration. Now fill in the seed capsule using a fringe seam, working spirally from the outside inwards (Fig. 2).

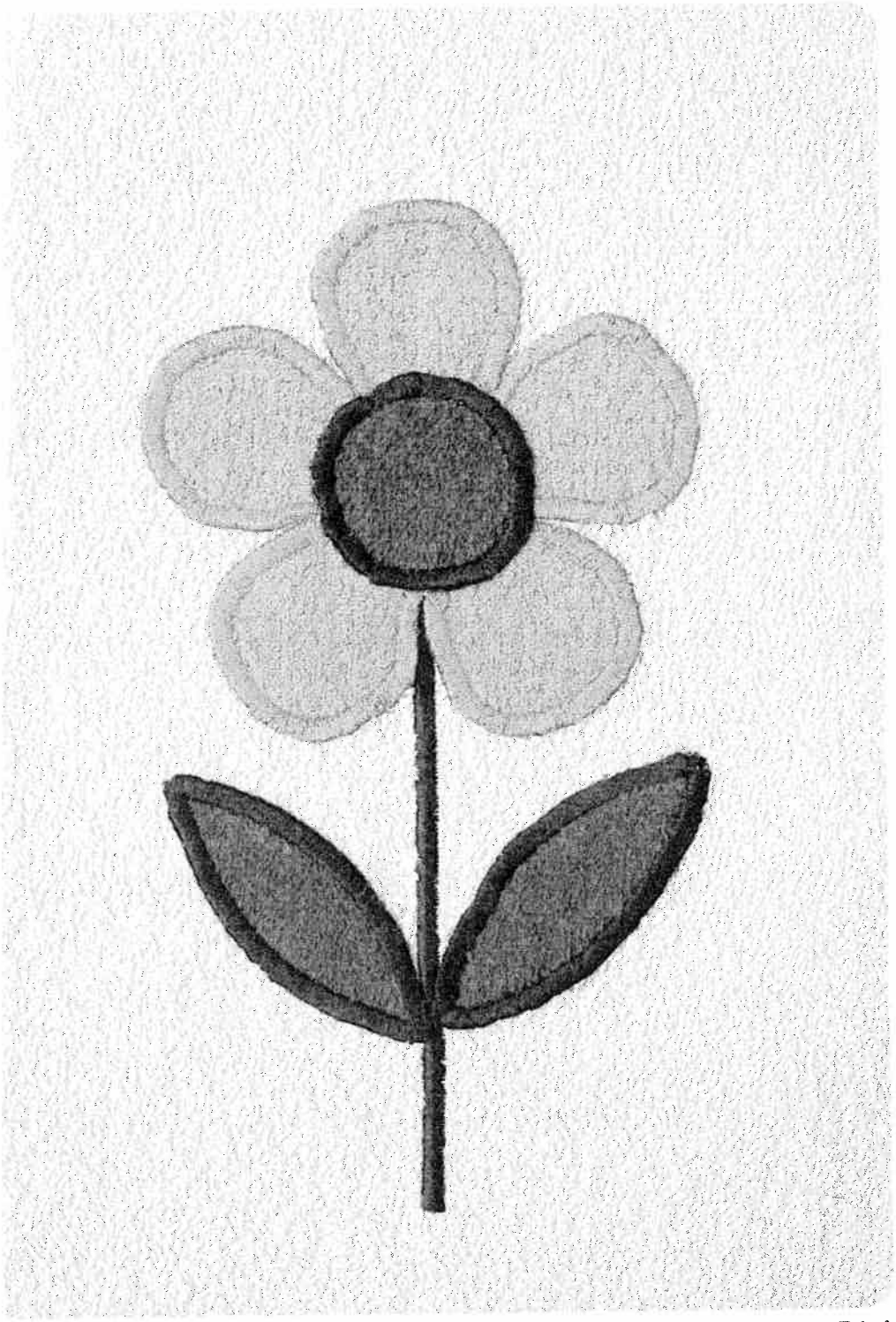

54 A

54 B

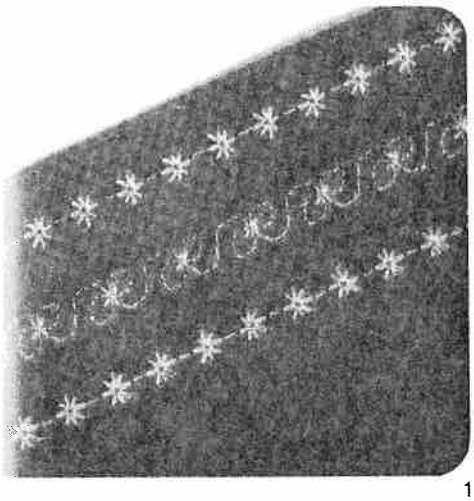

1

Ornamental seams on leather

prog			
Optional		−3+	0

Thread: embroidering/darning thread
Needle: 130/705 H-LR, size 80

Since leather is a pliable material, an underlay of double-folded paper or light non-woven material (e.g. vylene) should always be used. Do not set the stitches too close, because leather splits easily and splits in leather show up on the finished work.

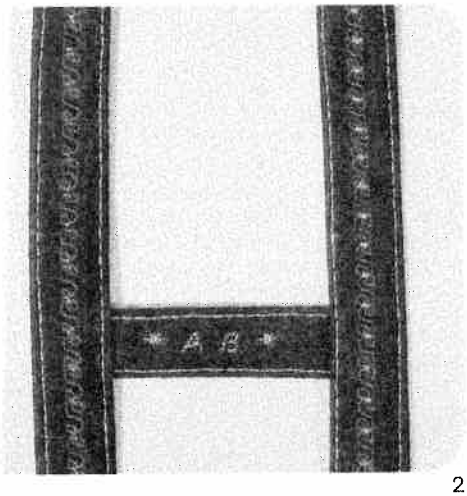

2

Flat leather seams

prog			
Optional		−3+	0

Needle: 130/705 H-LR; size 80

Overlap the raw edges by about 1/2 cm. Top-stitch both sides at a narrow margin using straight stitch. Instead of straight stitch it is also possible to use zigzag stitch or some other program to over-stitch the double seam.

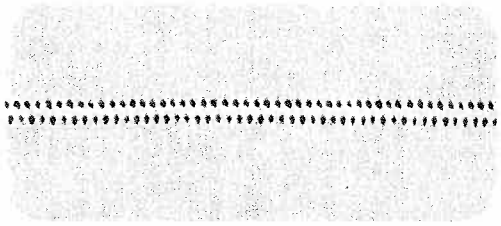

2

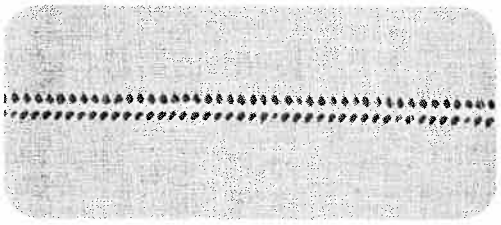

3

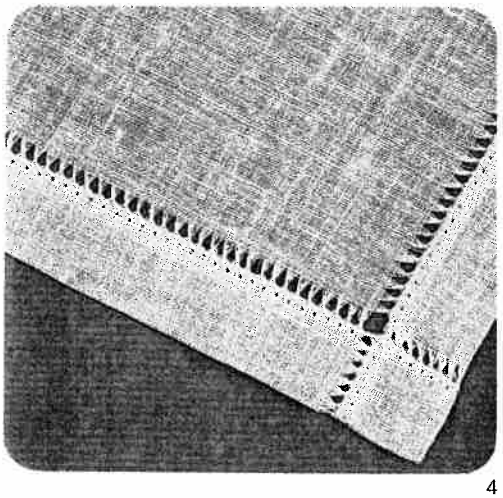

4

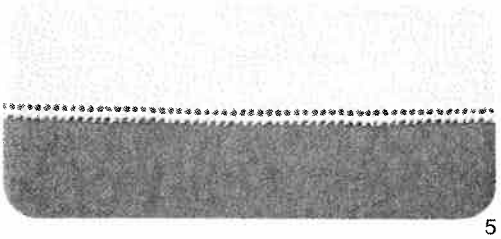

5

Hemstitching

As the illustrations show, hem-stitching can be used in different ways, both as an edge reinforcement and as a fancy effect on table linen or clothing articles.

Hemstitching with wing needle

prog			
37 38		-3+	2

Thread: embroidering/darning thread
Needle: wing needle

For this work, four threads are drawn, five threads are left in, then a further four threads are drawn. Oversew the five threads left in the fabric using program 37 or 38 (Figs. 2 and 3).

Hemstitching turned-in hem edges

prog			
37		-3+	2

Stitch width: 2 mm
Thread: embroidering/darning thread

To hemstitch a turned-in hem edge (Fig. 4), first draw the number of fabric threads for the required hem stitch width. Place the hem breakline against the edge where the threads are drawn and tack it in place. Now secure the hem using the above-mentioned program.

Hemstitching as an edge finish made with the wing needle

prog			
37		-3+	0

Thread: embroidering/darning thread
Needle: wing needle

This edge finish is used on very light and thin fabrics. It is particularly well suited for valances, flounces and frills or for finishing edges. For this sewing job **no threads** must be drawn out of the fabric. Sew at sewing-foot width along the fabric edge, using the edge of the sewing foot as a guide. Then carefully trim the excess material along the hemstitching with a small scissors (Fig. 5).

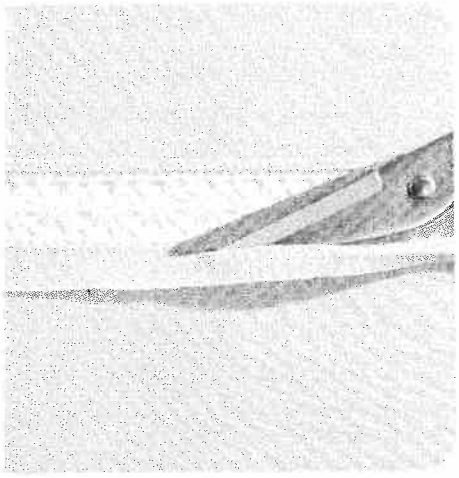

1

Inserting lace

For this work, two worksteps are required

First workstep

prog			
00		-3+	0

The lace insert is first secured to the right material side and is sewn on at a narrow margin with straight stitch.
The material underneath the lace is opened at the middle and ironed to one side.

Second workstep

prog			
10		-3+	0

Sew over the lace edge on both sides with small, dense zigzag-stitches from the face side. Cut off the remaining material on the reverse side (Fig. 1).

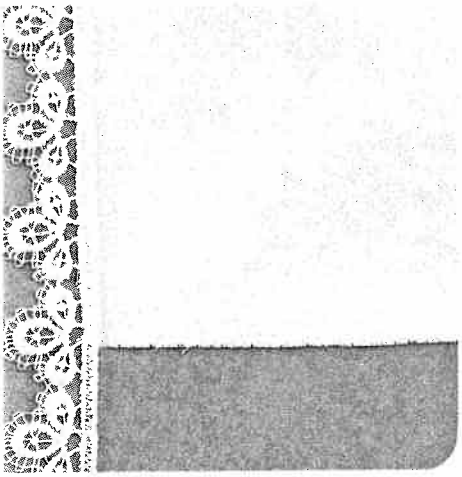

2

Attaching lace

For this work, two worksteps are required

First workstep

prog			
10		-3+	0

Stitch width: 5.0 mm
Stitch length: 1.5 mm

Serge the raw edge with zigzag stitches (Fig. 2).

Second workstep

prog			
00		-3+	0

Stitch length: 3.0 mm

Baste and sew the lace onto the right material side (Fig. 3).
Secure the corners with stitches.

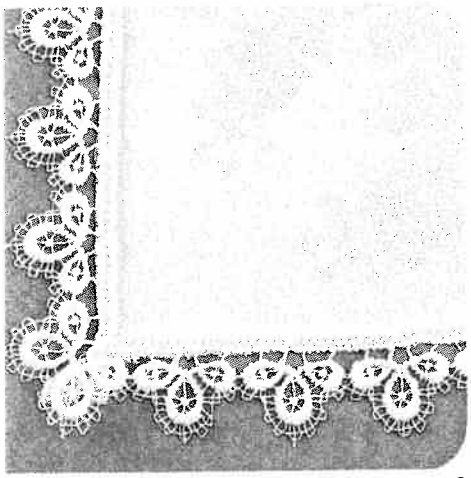

3

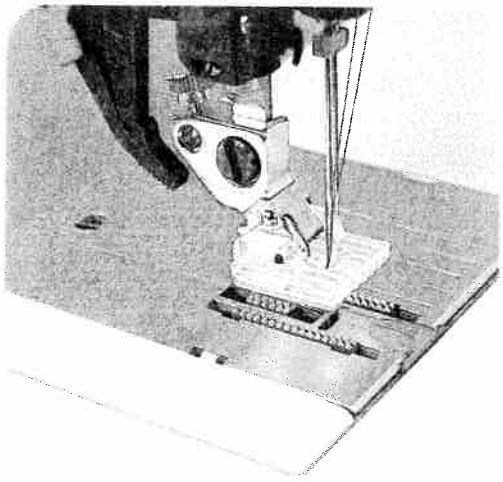

1

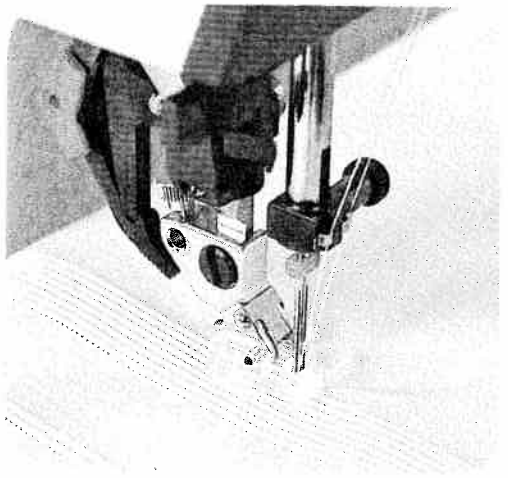

2

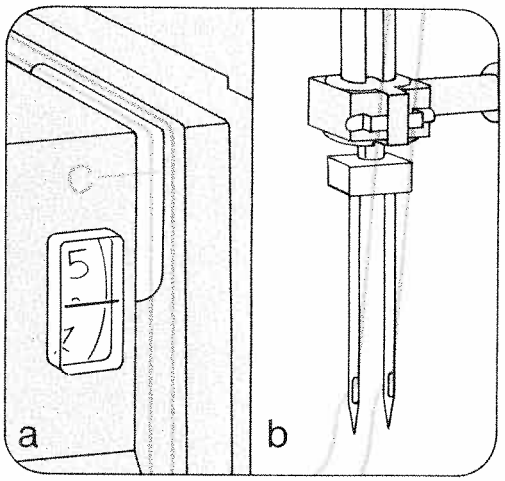

3

Cording

Cording foot + cording tongue (special accessory)

prog			
00		-5+	*

* Cording foot

Needle: Double needle

Cording seams are especially popular as a decoration on underwear, dresses, blouses, etc.

Cording sewn with the cording tongue

Cording is always sewn with two needle threads. Place a spool of thread on each spool pin and secure it in position with the corresponding unwinding disc. Place one thread to the right, and the other to the left of disc "C" (Fig. 3 a). Then continue threading the machine, as usual. Do not twist the two threads. Thread each thread separately through thread guides and the needle eye (Fig. 3 b).

The thread tension should be adapted to every fabric type. The tighter the tension, the more prominent the cording appears. Fig. 1 shows how the cording tongue is engaged.

For thin materials, the cording foot with 7 grooves, the small cording tongue and a double needle of up to 2 mm are used.

For thicker materials, the cording foot with 5 grooves, the large cording tongue and the necessary double needle are used.

If you wish to sew several cordings beside each another, use the grooves of the cording foot (Fig. 2). For greater distances we recommend using the edge guide.

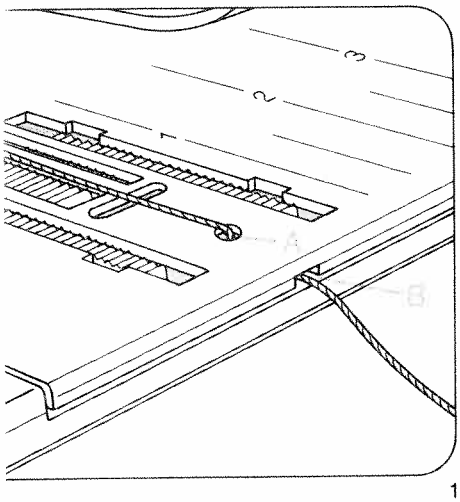

1

Cording sewn with gimp thread

prog			
00		-5+	*

* Cording foot

Needle: Double needle

Lift the needle plate off and pass the gimp thread through the round hole "A". After that re-insert the needle plate. Notch "B" is the entry groove (Fig. 1). Place the roll of gimp thread in front of the machine (see Fig. 2).

Place the beginning of the gimp thread together with needle thread and bottom threads to the rear under the cording foot. Move the detachable work support against the machine. Choose a gimp thread of the same colour as the outer fabric.

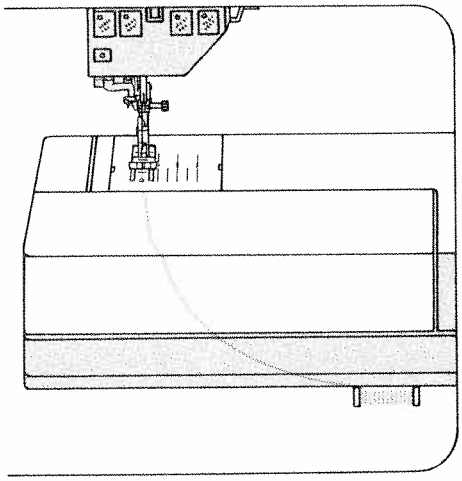

2

Narrow pleats

prog			
00		3-5	0

Needle: 130/705-H, size 80

Iron the first fold line and stitch at the required width. Prepare and stitch the further fold groups in the same manner (Fig. 3).

For stitching down wider pleats we recommend using the edge guide. Adjust the edge guide to the required width. Guide the material so that fold runs along the edge guide. (See page 73.)

3

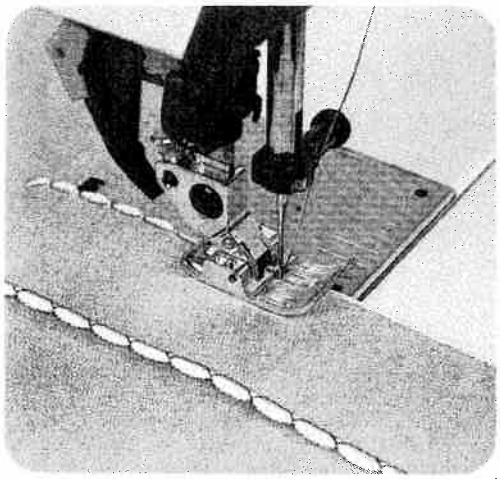

1

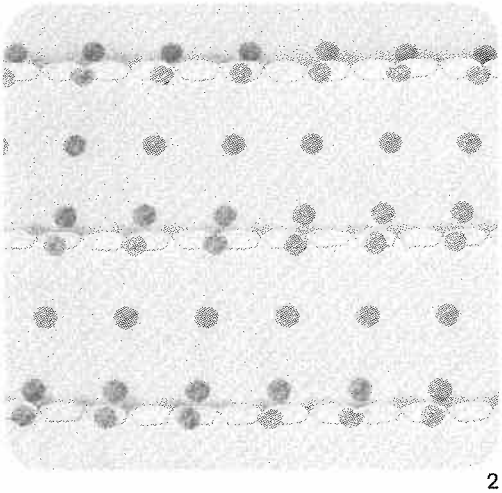

2

Shell edging

prog			
05		−5+	2

Stitch length: *1.5 mm*
Key: *Pattern mirror*

Shell edging provides nice trimming, especially o sheer, soft materials. Fold over the fabric edge on along the line which is to be decorated. Durir sewing, the blindstitches draw in the fabric ed at regular intervals, thus producing a shell-ed effect. The stronger the needle thread tension, th more the fabric edge is indented.
Adding a wool thread in a different colour not on reinforces the edge, but also makes an attracti contrast trimming.
Place the material under the needle so that it pr trudes far enough to allow the wide zigzag blin stitch to pass over its edge (Fig. 1).

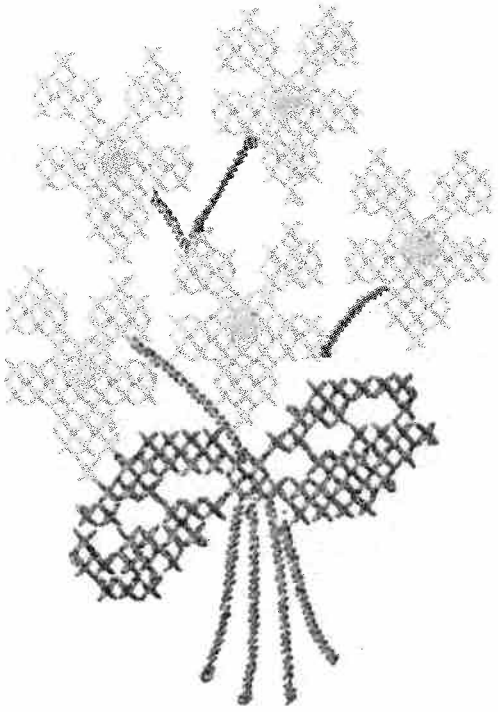

60 A

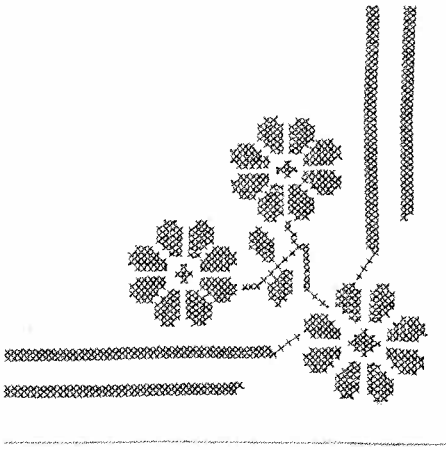

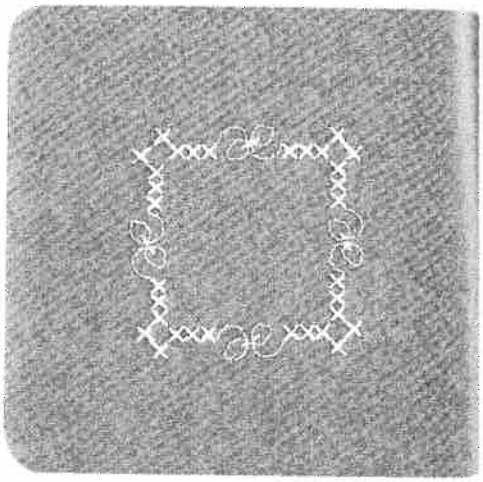

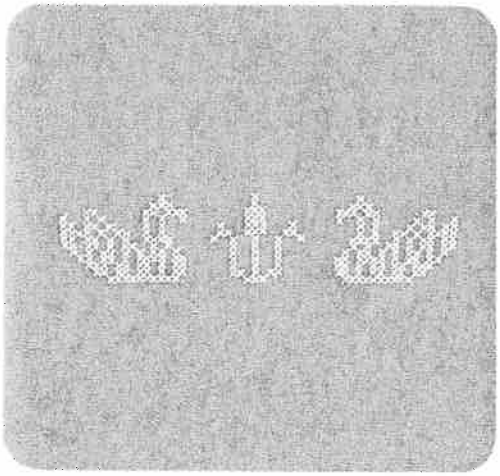

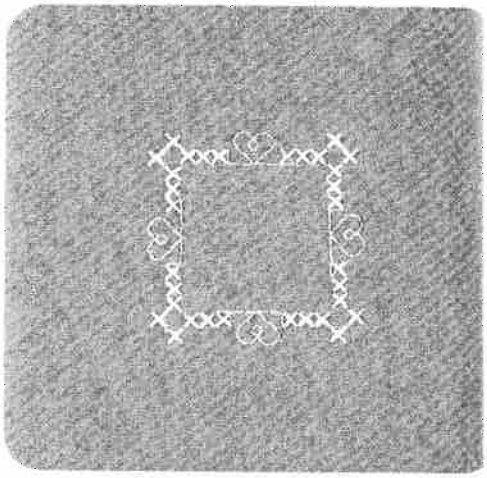

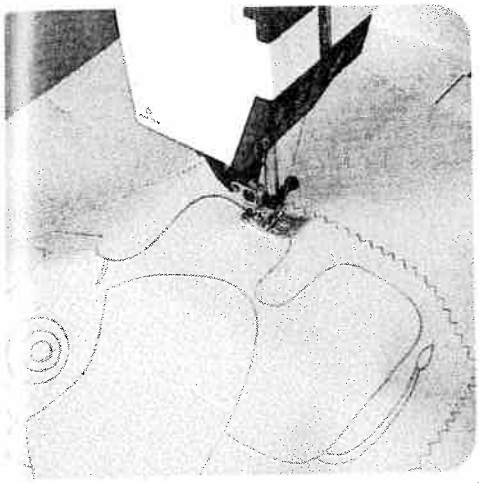

1

Appliqué work

For this, two worksteps are required.

First workstep

prog			
10		2 – 3	2

Stitch width: *0.5*
Stitch length: *1.0*

Second workstep

prog			
10		2 – 3	2

Stitch width: *1.5*
Stitch length: *0.2 to 0.25 (for cording)*

Trace the design on the reverse side of the fabric, lay the appliqué on the face side and baste it on, making sure it matches the fabric grain.

First workstep

Sew along the outline of the design on the wrong side (Fig. 1). Trim the excess material close to the contour seam (Fig. 2).

Second workstep

Sew over the raw edges of the appliqué with narrow, dense zigzag (purl) stitches (Fig. 3).

To make the edge of the appliqué more prominent, insert a filler cord in the seam.

Ready-made fabric appliqués can be applied much more easily. Before you cut out the design, iron on a fusible backing. This reinforces the material, makes it easier to cut, and prevents fraying.

Baste on the design. Place three layers of tissue paper under the fabric and sew along the edges of the design with dense, narrow zigzag stitches. In this way, a good-looking seam is produced.

- For cording we recommend the appliqué foot (special accessory)

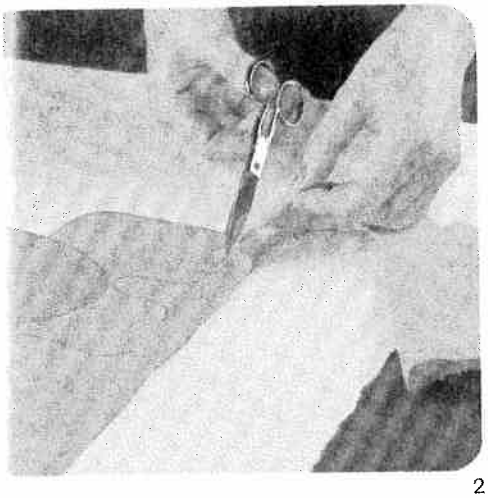

2

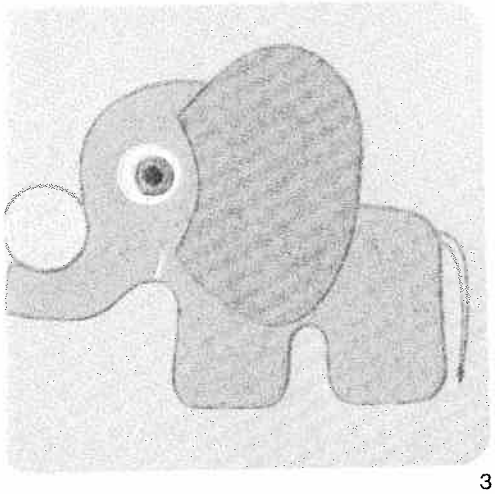

3

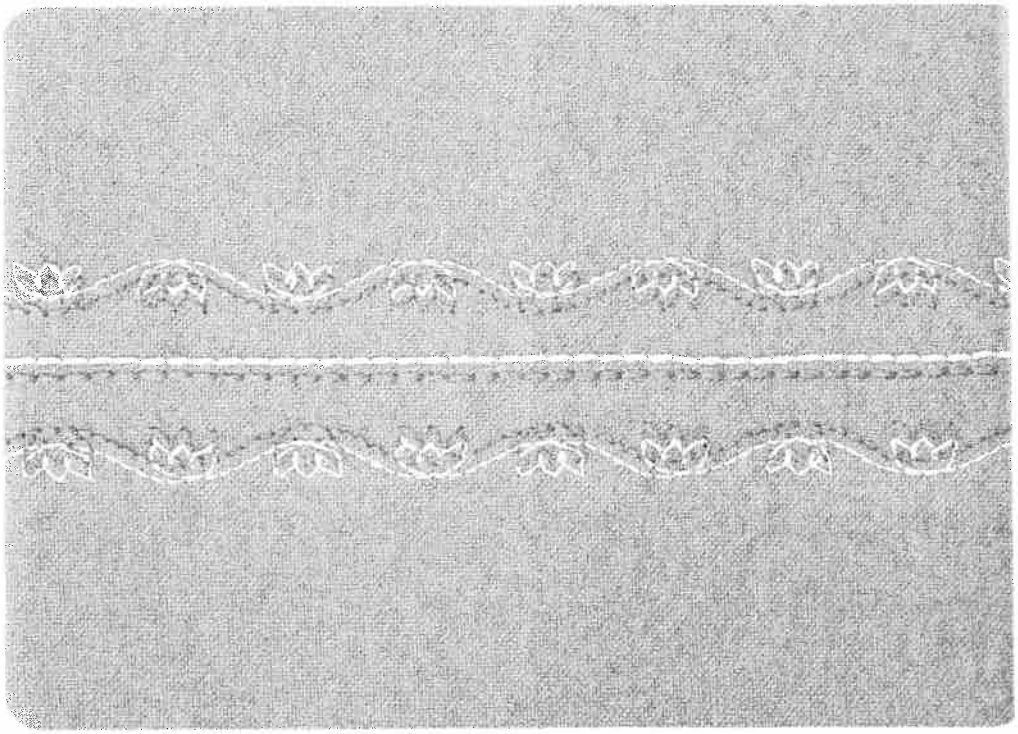

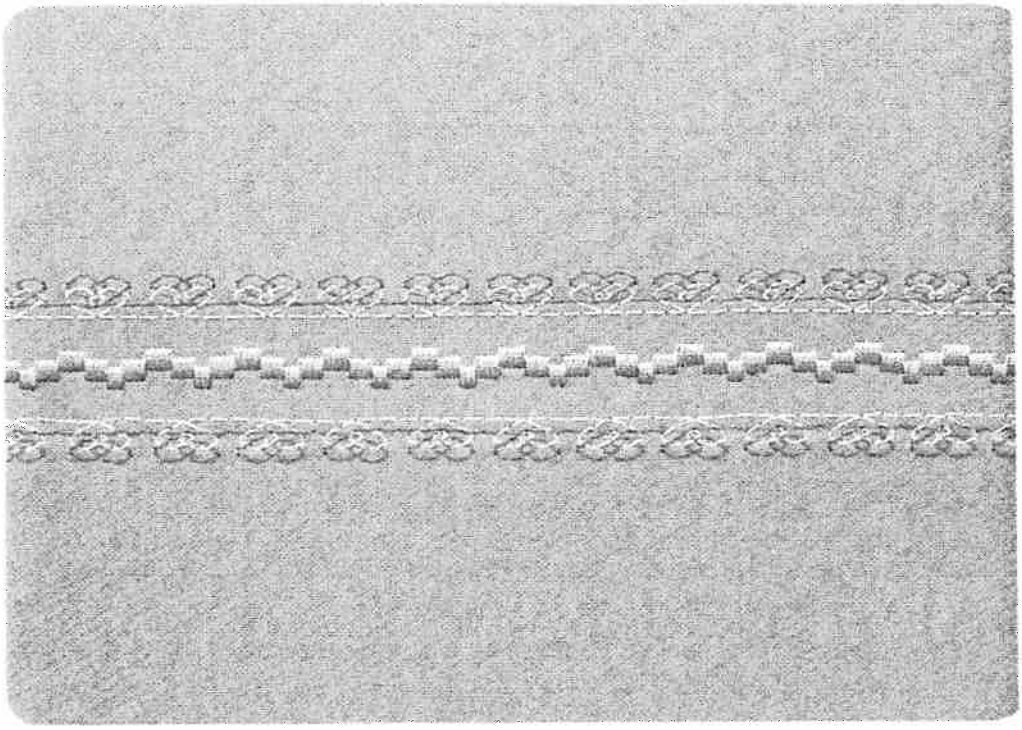

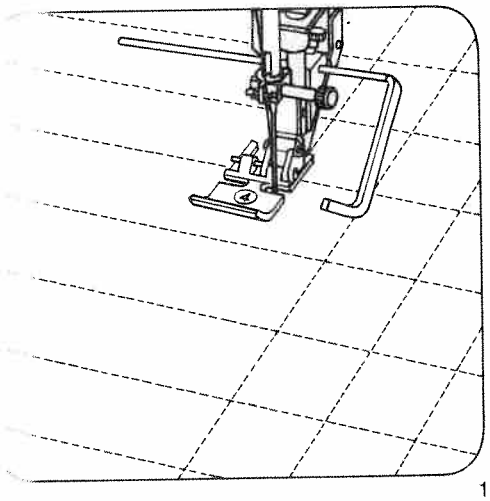

1

Quilting

prog			
00		3 – 5	0

● Edge guide

Seams stitched on articles filled with cotton wool or some other soft padding have a very prominent effect. For this purpose, batting, foam plastic or flannel is placed between the top ply and a lightweight bottom ply (Fig. 3).

To keep the fabric plies and the padding in place, baste them together with rows of long basting stitches spread over the whole area.

Squares and diamonds can be sewn on the straight or on the bias of the material. On fabrics with regular patterns stitch between the patterns or around them.

The spacing between seams can be set as required by adjusting the guide accordingly.

Trace the seam line for the first seam on the fabric or guide the quilting gauge along the straight-cut fabric edge.

When you have completed the first seam move the work sideways so that the quilting gauge runs along the first seam or the traced seam line. For each subsequent seam, guide the gauge finger along the preceding line of stitching (Fig. 1).

Quilting can also be done advantageously on patterned materials.

Preparation of the material is the same as described above. Just sew around the contours and you have a very beautiful piece of embroidery (Fig. 2).

2

3

Programming the computer with embroidery switches and monograms

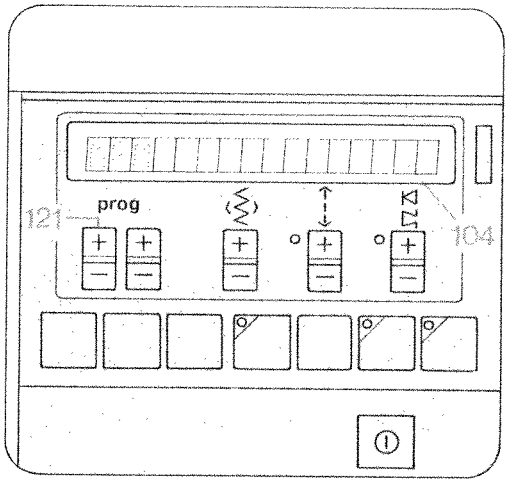

1

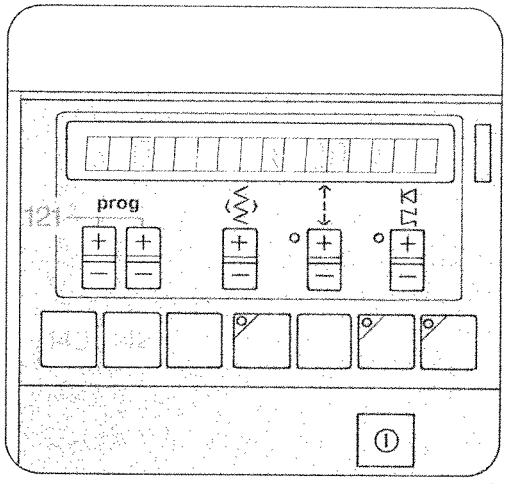

2

Capacity of the MEM-memory for programs 00 to 49

- The Creative computer has one MEM-memc
- 12 programs (from 00 to 49) can be enterec the MEM-memory one after the other.
- When the machine is switched off the p grams stored are cancelled.
- When the capacity of the memory is used no additional programs are accepted.
- The programs can be cancelled in the ME memory by means of the "corrector" key.
- **Before a new program sequence is enter the MEM-memory must be empty.**

Now to select the MEM-memoi

- Select the MEM-memory with the left "p gramming" key 121 (Fig. 1).
- The MEM-memory is free if no progr number appears in display 104 (Fig. 1).
- Select the desired program by pushing „p gramming" keys 121 and enter it in the ME memory by pushing "program entry" key 1 (Fig. 2).
- If the program stored is no longer neede cancel it in the MEM-memory by pushing "c rector" key 142 (Fig. 2). See page 65.

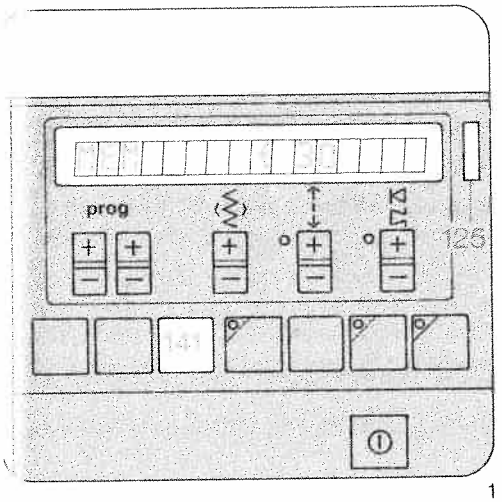

1

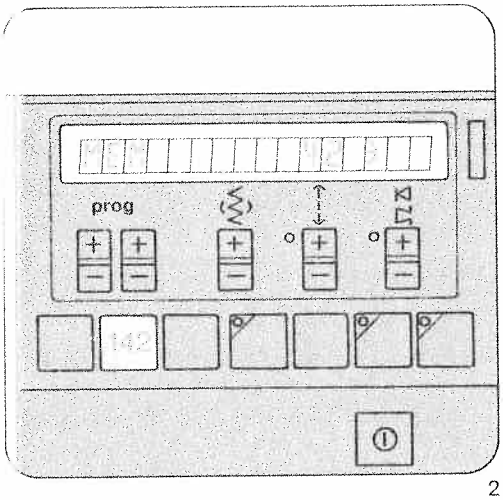

2

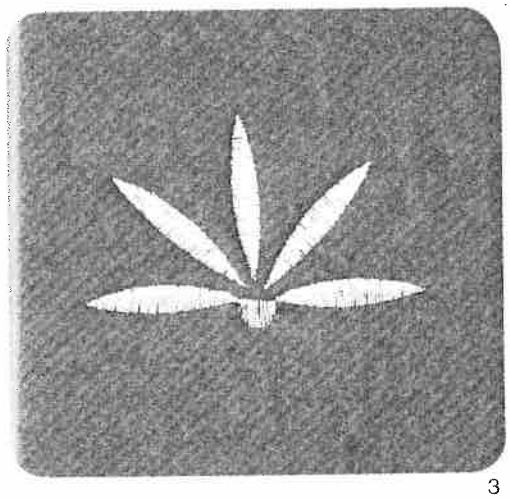

3

Verifying the programs stored

If you want to verify the program stored,

- push "repeat" key 141.
- All programs entered in the MEM-memory can be verified when their number appears in display 104 as you repeatedly push "program cycle" key 125 (Fig. 1).

Symbol ⟨ to the left of the program number stands for program start (Fig. 1). Symbol ⟩ to the right of the program number stands for the end of a program sequence (Fig. 2).

Correcting the programs stored

"Corrector" key 142 has a dual function:

- (1) When it is pushed, the number of the last program of a program sequence appears in display 104.
- (2) When it is pushed repeatedly the last program stored is cancelled (Fig. 2).

Single pattern

Various stitch patterns, such as monograms, numbers and embroidery motifs, are very attractive when sewn as single pattern. To do this,

- push "single pattern" key 127.
  The machine sews the stitch pattern programmed, ties off the seam and stops automatically (Fig. 3).

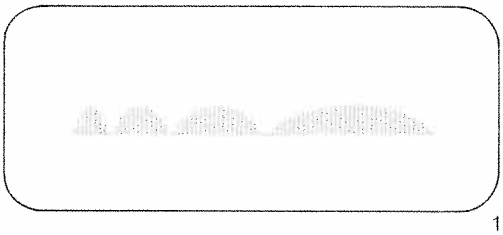

1

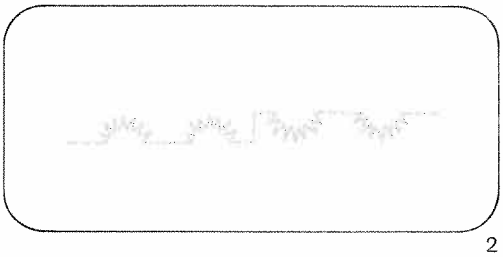

2

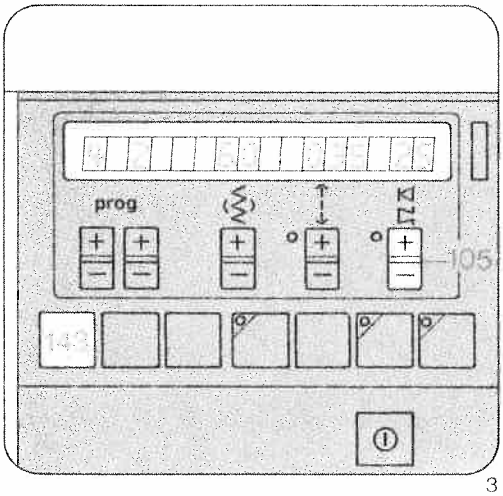

3

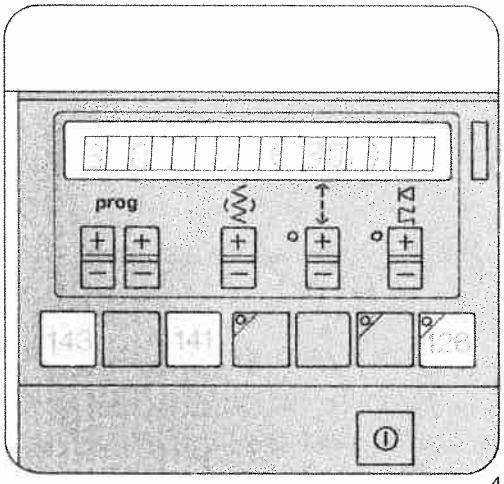

4

Lengthening patterns at the same stitch density

The length of a decorative-stitch pattern programmed can be varied, while the stitch density remains the same, when the indicator light to the left of key 105 lights up. The pattern can be varied in length from 2.0 to 90 mm. When a pattern is sewn with short stitches, its maximum length is limited (Fig. 1).

Indicated below are the maximum and minimum pattern lengths for various stitch lengths.

Stitch length in mm	Pattern length in mm from	to
0.2	2.0	50
0.25	2.0	60
0.3	2.0	70
0.35	2.0	80
0.4 and over	2.0	90

Before entering a program, you can vary the pattern length by pushing key 105.

Example:

- Select program 42
- Set pattern length 25 (with key 105)
- Push "program entry" key 143 to enter the pattern with the modified data in the memory (Fig. 3).

Pattern mirroring

If you want to sew a pattern in reflex (Fig. 2), push not only the program key, but also

- "pattern mirroring" key 126 and
- "pattern entry" key 143.

The pattern mirroring function is indicated by the vertical dash symbol appearing after the program number in the display (Fig. 4).

If you want to sew an entire combination of patterns in reflex, press the following keys after programming:

- "pattern repeat" key 141 and
- "pattern mirroring" key 126 (Fig. 4).

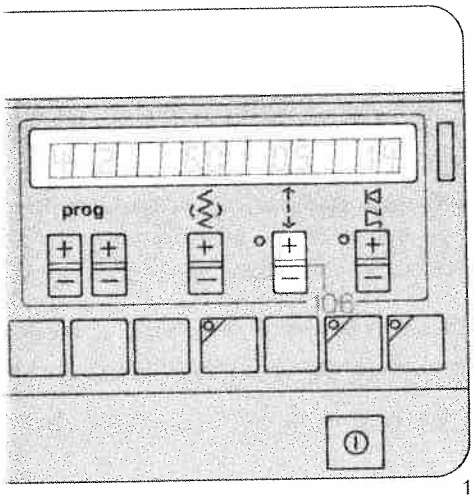

1

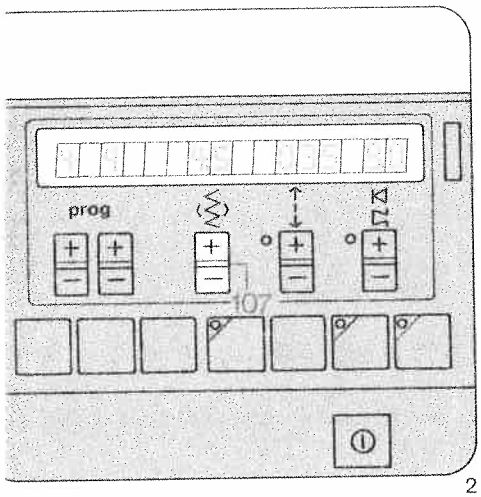

2

Changing the stitch length

All programs and program combinations can be varied in length and width, as desired, and entered in the computer memory.

Before entering the last decorative-stitch pattern program, determine the stitch length, using key 106.

This altered stitch length also determines the length of stitch of the programs entered previously.

Example:

- Select program 44
- Push "program entry" key 143
- Select program 46
- Push "program entry" key 143
- Select program 44
- Push "program entry" key 143
- Select program 42
- Change the stitch length to 0.5
- Push "program entry" key 143

Now the entire program sequence together with the altered stitch length is stored in the computer memory.

Changing the stitch width

Before entering a program you can change the stitch width by pushing key 107.

Example:

- Select program 44
- Stitch width 4.5
- Push "program entry" key 143

The pattern together with the altered stitch width is now stored in the computer memory (Fig. 2).

ABCDEFGHIJKLMNOPQRSTUVW
XYZ ÄÖÜ

0 1 2 3 4 5 6 7 8 9

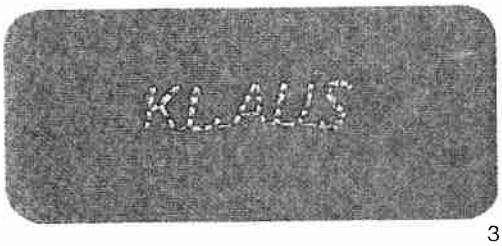

3

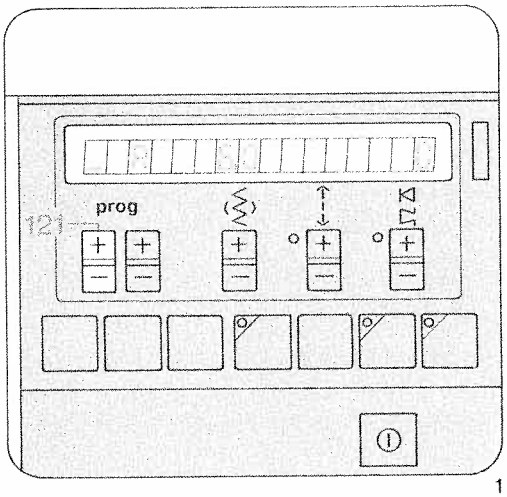

1

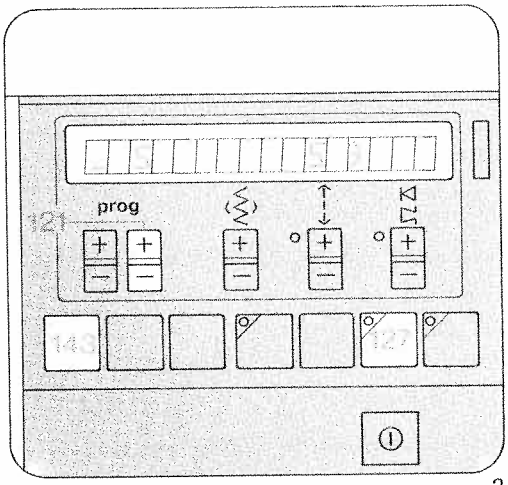

2

Programming letters and numbers

With your PFAFF Creative you can stitch the nu bers from 0 to 9 and the letters of the alphab These are used to enhance garments or ma linen goods and outerwear. You can even co pose texts and write them on the fabric.

Capacity of MEM-memory

for letters and numbers.

You can enter up to 36 letters and numbers in th MEM-memory one after the other.

Sewing letters _A

prog			
_A		−3+	2

Example: KLAUS

- Select _A by means of "programming" k 121− (left, minus) (Fig. 1).
- Select the following letters
  _K _L _A _U _S
  by means of "programming" key 121+ (rig plus) and
- enter them in the computer memory by pres ing "program entry" key 143 each time (Fig. 2
- Press "single pattern" key 127.
- Sew the program stored (Fig. 3).

Sewing program .0

- Select program .0
  Program the numbers in the same way as th letters.

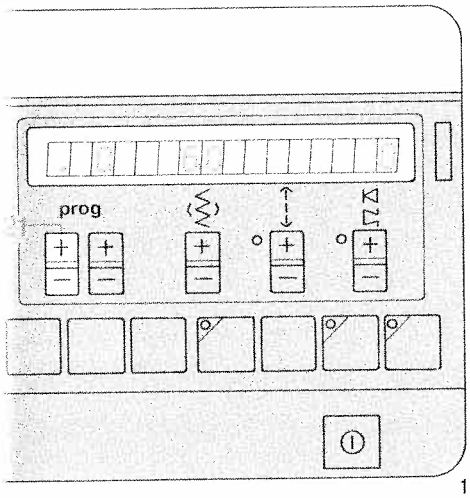

1

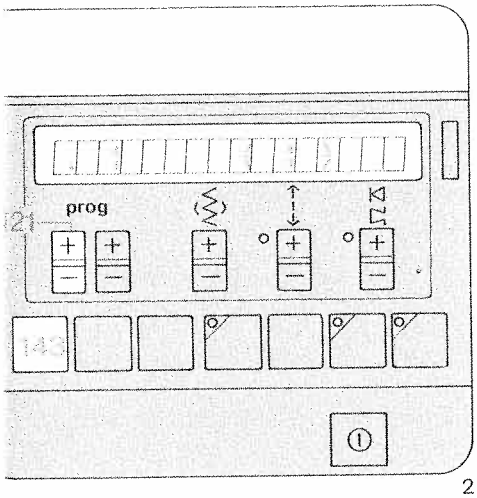

2

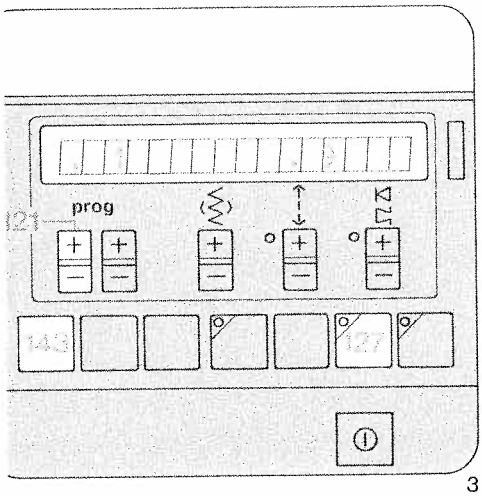

3

Sewing dots

Dots can be used in many different ways. For instance, after an abbreviation and between two lettery. A dot can be selected together with every number.

Example: 1.5

- Select .0 by means of "programming" key 121– (left, minus) (Fig. 1).
- Select .1 by means of "programming" key 121+ (right, plus) (Fig. 2).
- Press "program entry" key 143
- **Dot quick selection**
- Press "program entry" key 143 and keep it depresed (a 1 appears in the display) (Fig. 2).
- Press left "programming" key 121+.
- Substitute a dot for the 1 (Fig. 3).
- Select .5 by means of the right "programming" key 121+.
- Press "program entry" key 143.
- Press "single pattern" key 127.

Sew the program stored (Fig. 4).

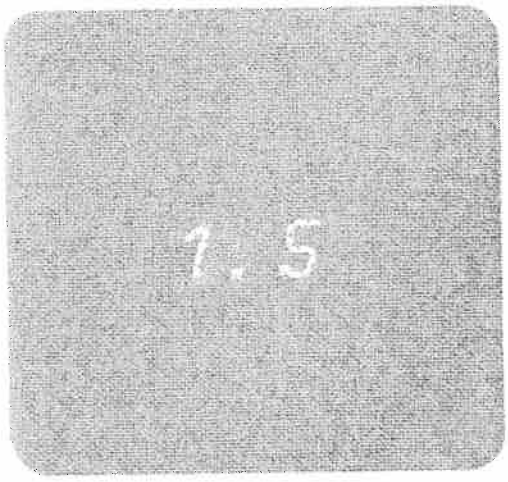

4

1

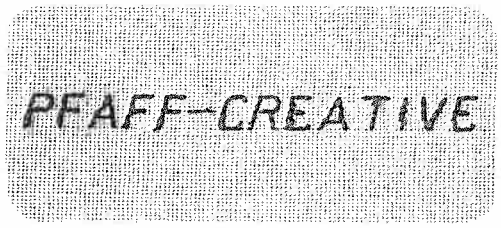

2

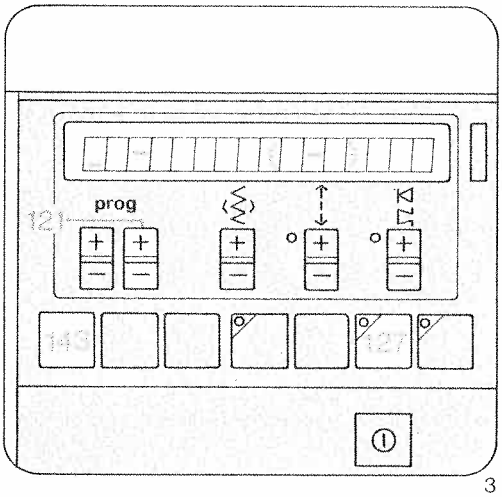

3

Spacing between words _A

Example: PFAFF____KARLSRUHE

Between two words it is always necessary to program a space. All block letters with a minus symbol can be programmed with a space. Three or four space symbols can be selected, depending on how much space is required (Fig. 1).

- Spacings are programmed the same way as with dot **quick selection** (see page 69).

Sewing hyphens (or dashes)

Example: PFAFF-CREATIVE

- Press right "programming" key 121– until a hyphen in the desired length appears in the display (Fig. 2).
- Press "program entry" key 143 (Figs. 2 + 3)
- Enter the remaining text.
- Press "single pattern" key 127.

Dots and dashes

At the end of each alphabet a dot and a hyphen (dash) are programmed.

- Select the desired program by the right "programming" key 121.
- Press "program entry" key 143.

1

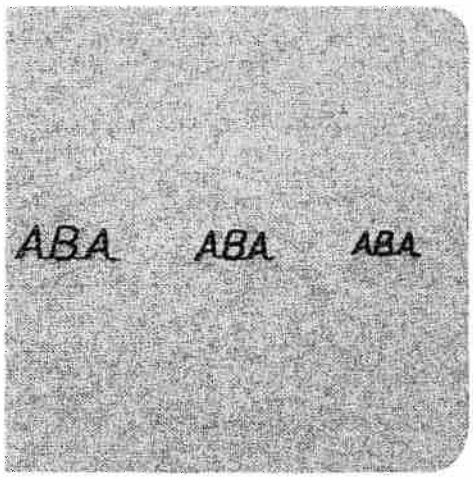

2

3

Writing texts

Begin by marking the beginning of the text on the fabric.

After sewing, cut the threads between letters and numbers and in the spacings (Fig. 1).

If you want to verify the text, press "program cycle" key 125. The text will then appear in the display (see page 65).

Letters and numbers in different sizes

Letters and numbers can be sewn in different sizes. The maximum character height is 6 mm. Before the last entry of a letter or number, its height can be determined by means of stitch width key 107 (Fig. 2).

Correcting program entries

If you have missed out a letter or figure or entered a wrong one, you can correct the entry, Cancel the individual entries back up to the mistake using key 142 and correct it. Then enter the rest of the text again (see page 65).

Programming names together with embroidery stitches

- Select the following programs:

  1 x 35
  1 x 41
  1 x 35
  _E _V _A
  1 x 35
  1 x 41
  1 x 35

  and enter them in the computer memory by pressing "program entry" key 143 each time.
- Press "single pattern" key 127 (Fig. 3).

  Sew the program stored (Fig. 3).

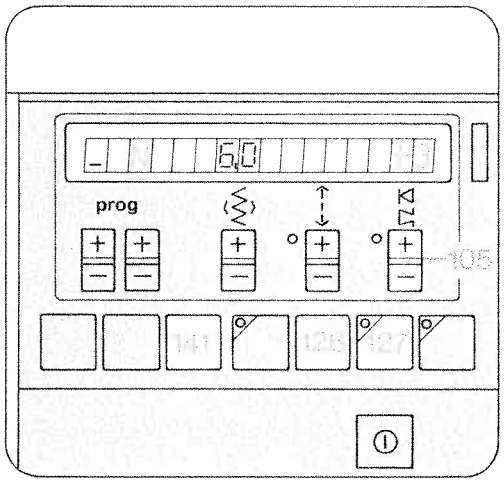

2

1

1 a

Balancing out letters and numbers

Letters or words shift occasionally, depending on the fabric used. This can be corrected with the "balancing" key (Fig. 1).

Words and texts can only be corrected together. The letter or number entered last is corrected towards plus or minus with key 105, and the correction entered by pressing "program entry" key 143. The correction takes effect for the entire program stored.

Example: SURFEN (surfing)

- Press "pattern start" key 128.
- Program "N" appears in the display.
- Select +3 with "balancing" key 105 (Fig. 2).
- Press "repeat" key 141.
  The program has now been corrected with +3 (Fig. 1a).
- Press "single pattern" key 127.

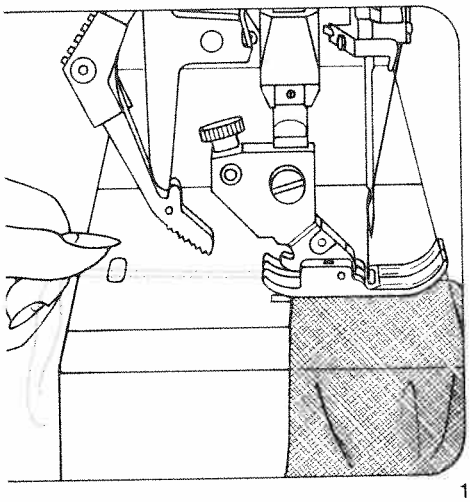

1

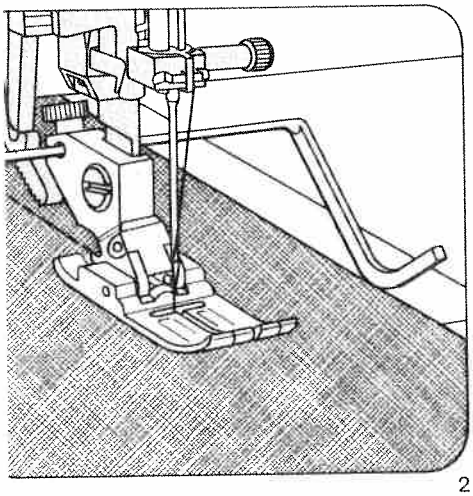

2

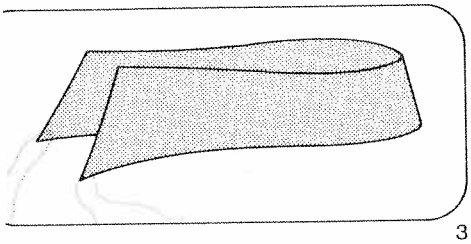

3

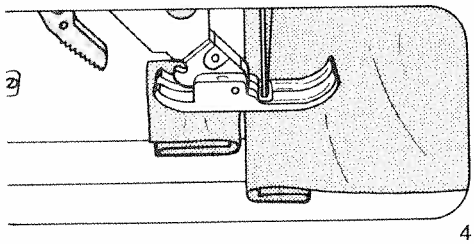

4

Sewing with straight, utility and stretch stitches

Tips for embroidering and sewing with the PFAFF creative 1371

- Before you begin, first try sewing on a piece of waste fabric.
- Check stitch pattern and tension
- Secure the beginning and end of the seam by pressing the "tie-off/button-hole" key.
- For sewing light, soft and stretch materials hold the thread ends at the beginning of sewing (Fig. 1).
- With cross seams, such as lap-felled seams, we recommend cutting out the fold and pressing the seam. This will provide a flatter cross seam.
- In the case of problem materials, you can achieve better sewing results with the left needle position.
- Exact stitching of edges is facilitated by the marking guide lines on the needle plate or by an edge guide (Fig. 2).
- If you have to interrupt work during sewing, e.g. with long fabric panels or upon change of sewing direction, select needle position "down".
- Thread the needle with the needle threader.

Top-stitching collar points

- Insert a thread into each collar point before beginning to sew and leave approximately 10 cm of thread hanging. When stitching the corner, you pull on the threads of the respective corner for the first stitches in sewing direction. The material feed is supported in this way and you obtain a beautifully stitched corner (Fig. 3).
- For top-stitching edges, especially in the case of soft materials, a round-hole needle plate and a straight sewing foot with round needle hole can produce good sewing results (special accessories).
- **Sewing aid for thick seams**
  In order to ensure uniform feeding at the beginning of the seam, we recommend supporting the sewing foot with a piece of material of the same thickness (Fig. 4).

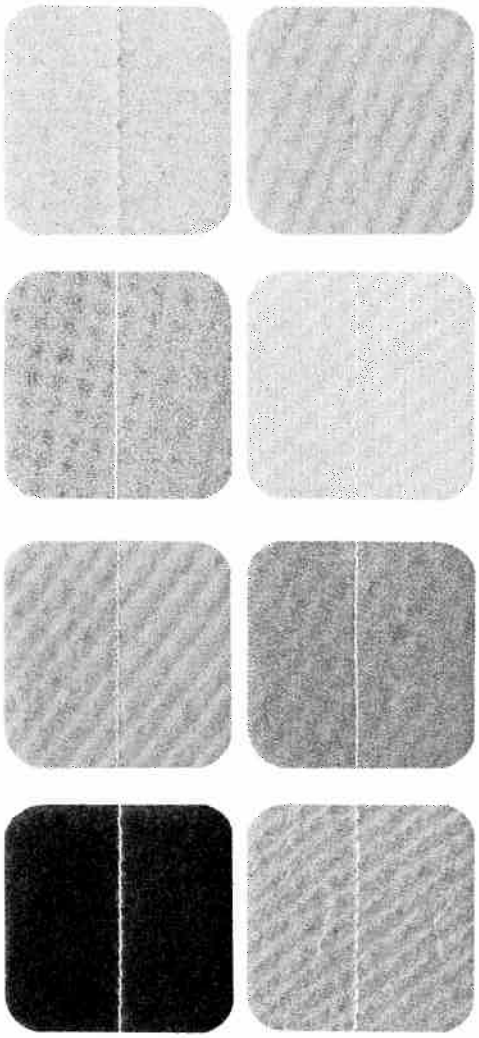

Woollen fabrics: well balanced stitch length an tension.

Batiste: light needle thread tension and mediu stitch length.

Velvet or silk velour: baste the seam line twic and sew in grain direction with a stitch length o 2.5 to 3 mm.

Be careful when pressing velvet! try out on piece of waste fabric and do not press down o the iron.

Twill/jeans: use special needles for jeans fabric When sewing over thick intersections it is advisabl to cut away seam allowances.

Synthetic materials: do not baste such material as plastic, foil or oilcloth (penetration holes!). Us long stitch lengths (4 to 6 mm) and the dual feed

Pure silk: set needle thread tension a little lowe Needle must be in perfect condition (otherwis fibres are pulled). Use stitch lengths between 2 an 2.5 mm.

Knitted or crocheted materials: sew with ligh needle thread tension and elastic seams.

Machine-embroidery silk: to obtain effective moti embroideries set the needle thread tension lighter i. e. lower than the buttonhole range.

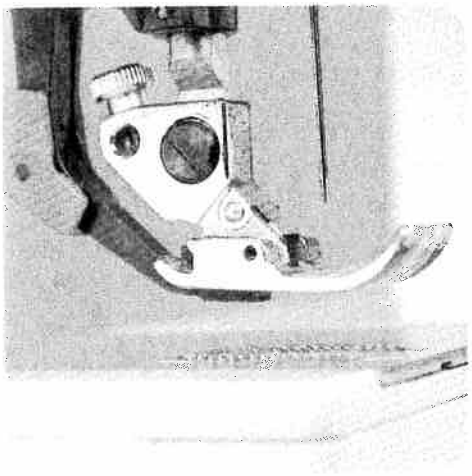

Dual feed

Pfaff offer the only household sewing machine in the world with built in dual feed. By this means, the material is not only fed from below, but also from above simultaneously. During processing of long fabric panels, such as curtains and side curtains, etc., there is no shifting of the material plies.
Also during assembly of checked or striped fabric panels the material is fed exactly by the dual feed. Especially during processing of delicate materials, no seam pucker results. In the case of plastics, oilcloth, imitation suede, etc. (i.e. in the case of extremely difficult materials), dual feed is an equally great help. It provides for excellent feeding of your workpiece, and consistent seams. The dual feed can be combined with several sewing feet.

To engage: raise sewing foot, push top feed downward until it engages.

To disengage: lift sewing foot, press lightly downward, pull top feed to the rear and allow it to move up.

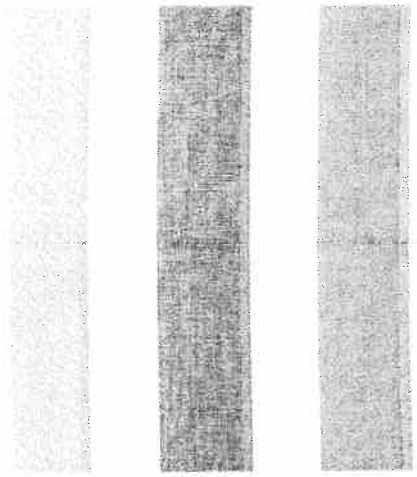

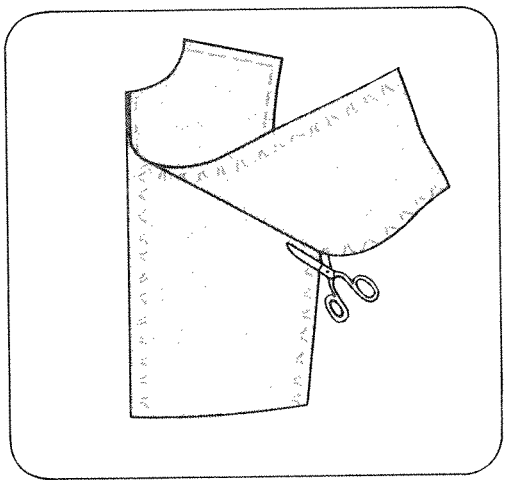

Making tailor's tacks

Fringe foot, special accessory

prog			
10		-3+	*

* Fringe foot

Stitch-width: *2 mm*
Needle: *80*
Sewing thread: *Machine embroidery thread*

Basting is a useful method of transferring se lines onto cuttings.
First mark all contours with tailoring chalk on t top material ply.
Sew along the marked lines with the fringe fo When all lines have been basted, pull the two fab plies apart to find the joining threads and cut the through carefully, to avoid damage to the mater

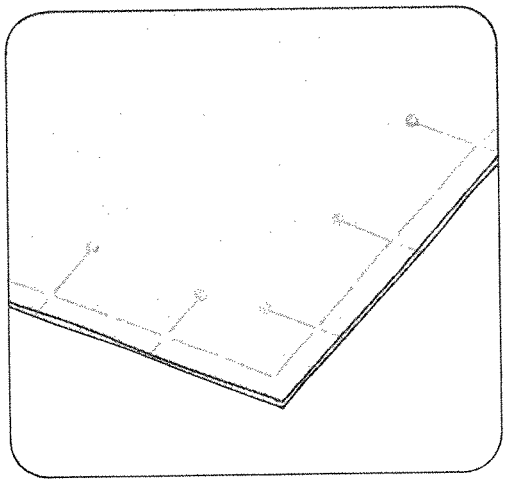

Basting

prog			
00	—	-3+	0

Feed dog: *lowered*
Sewing thread: *normal sewing thread*

For trying on a garment, we recommend securin the parts previously with basting stitches. Plac the workpiece under the sewing foot. Sew on stitch. After that, pull the material by the require stitch length to the rear. Repeat this procedure unt basting is completed. In order to avoid shiftin of the material plies during securing of patterne materials, insert dress pins crosswise to the bastin direction. Shifting of the material plies is thus largel avoided.

Basting at 6 mm stitch length

prog			
00		-3	0

Stitch length: *6 mm*

For this application do not lower the feed dog. Se the stitch length at 6 mm. Remove the bastin thread after sewing.

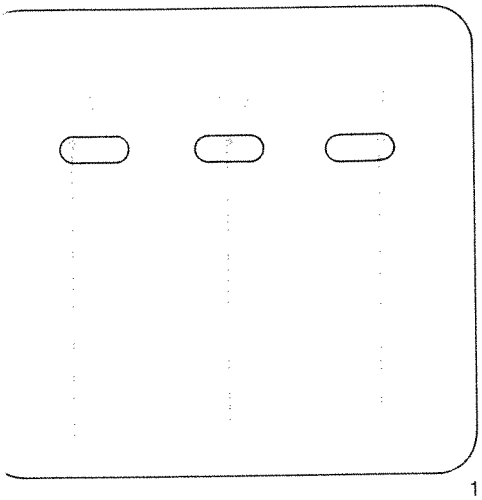

1

Change of needle position with straight stitch

Through adjustment of the needle (needle position), certain sewing work can be carried out easier. For example, if you wish to stitch at a narrow margin such as on collars or when inserting zippers, you select the required needle position.

- **For changing the needle position, the needle must always be in the highest position.**

Left needle position
Program: *01*

The left needle position is also shown by the symbol ⊢ to the left of the stitch width number in the display. With key 107 + the needle position can be changed from left to right for 13 different positions. **The right needle position** is shown by the symbol ⊣ to the right of the stitch width number in the display (Fig. 1).

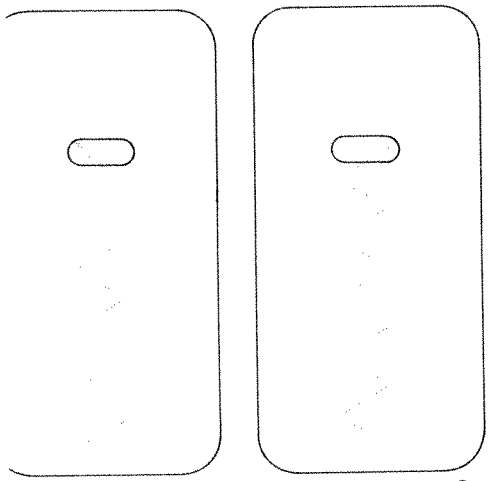

2

2 a

Change of needle position with zigzag stitch

- The needle must always be in the highest position.

Right needle position (Fig. 2a)
e. g.
Program: *11*
Stitch-width: *as required*
Stitch-length: *as required*
Left needle position (Figs. 2 + 3)
Program: *11*
Stitch-width: *as required*
Stitch-length: *as required*
Key: *pattern mirroring*

With the above settings the zigzag-stitch program stored can be sewn with the needle positioned at the right or left of its throw. If the zigzag stitch is to begin at the left of the needle throw, the "pattern mirroring" key must be pressed in addition. Pattern mirroring is indicated by symbol ⊰ appearing ahead of the number in the display (Fig. 3).

To inccrease or decrease the stitch width, repeatedly press stitch width key 107 at plus (+) or minus (−) until the needle is set at the desired stitch width.

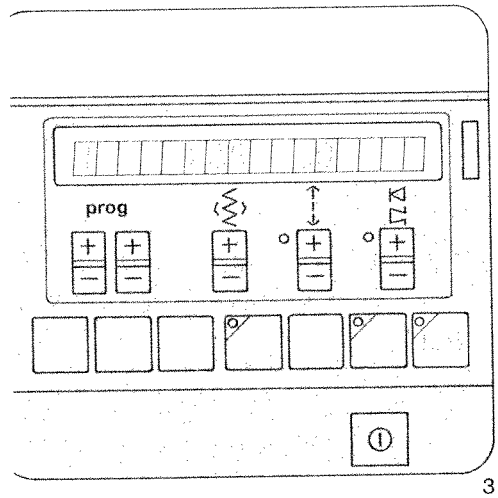

3

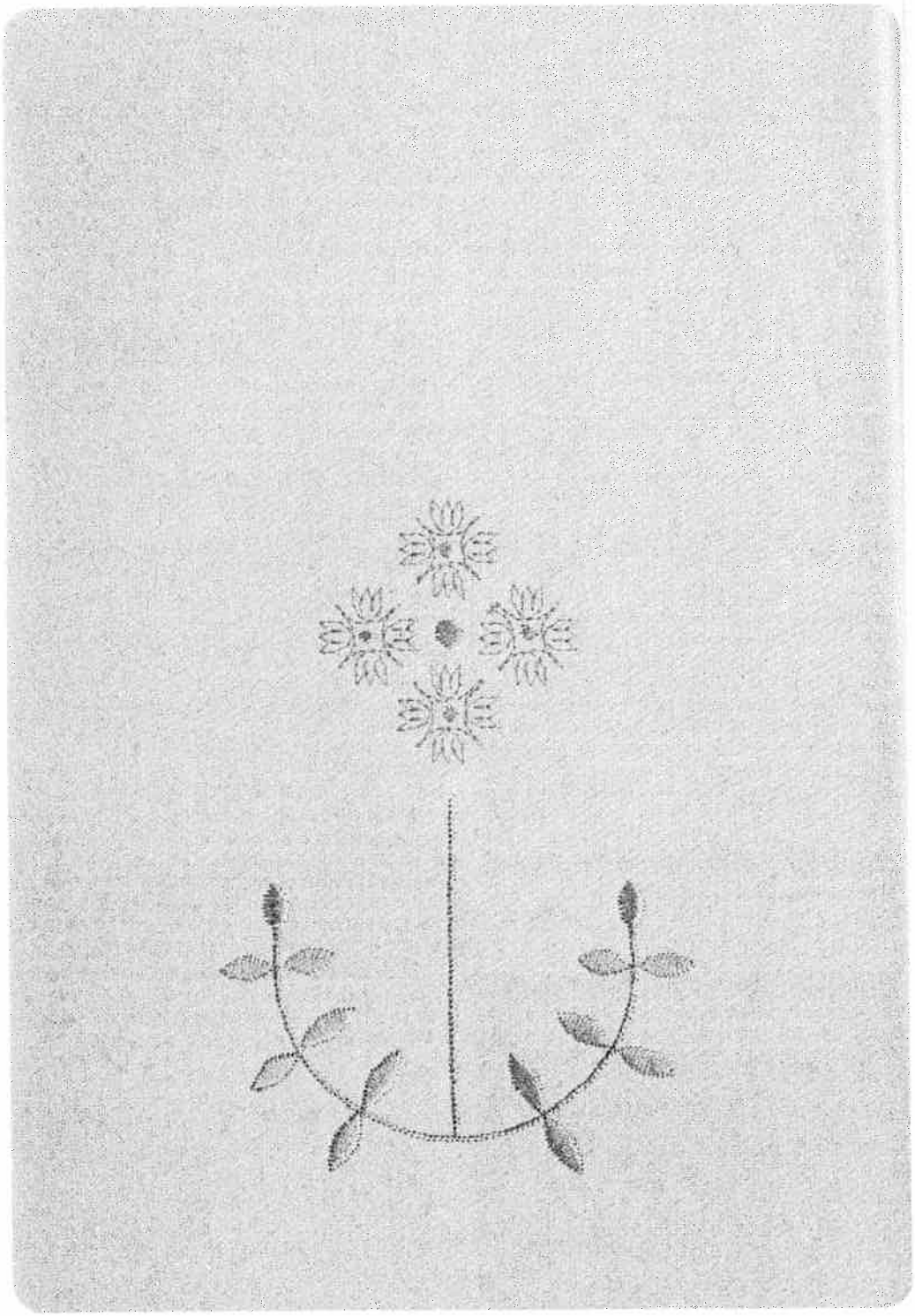

77 A

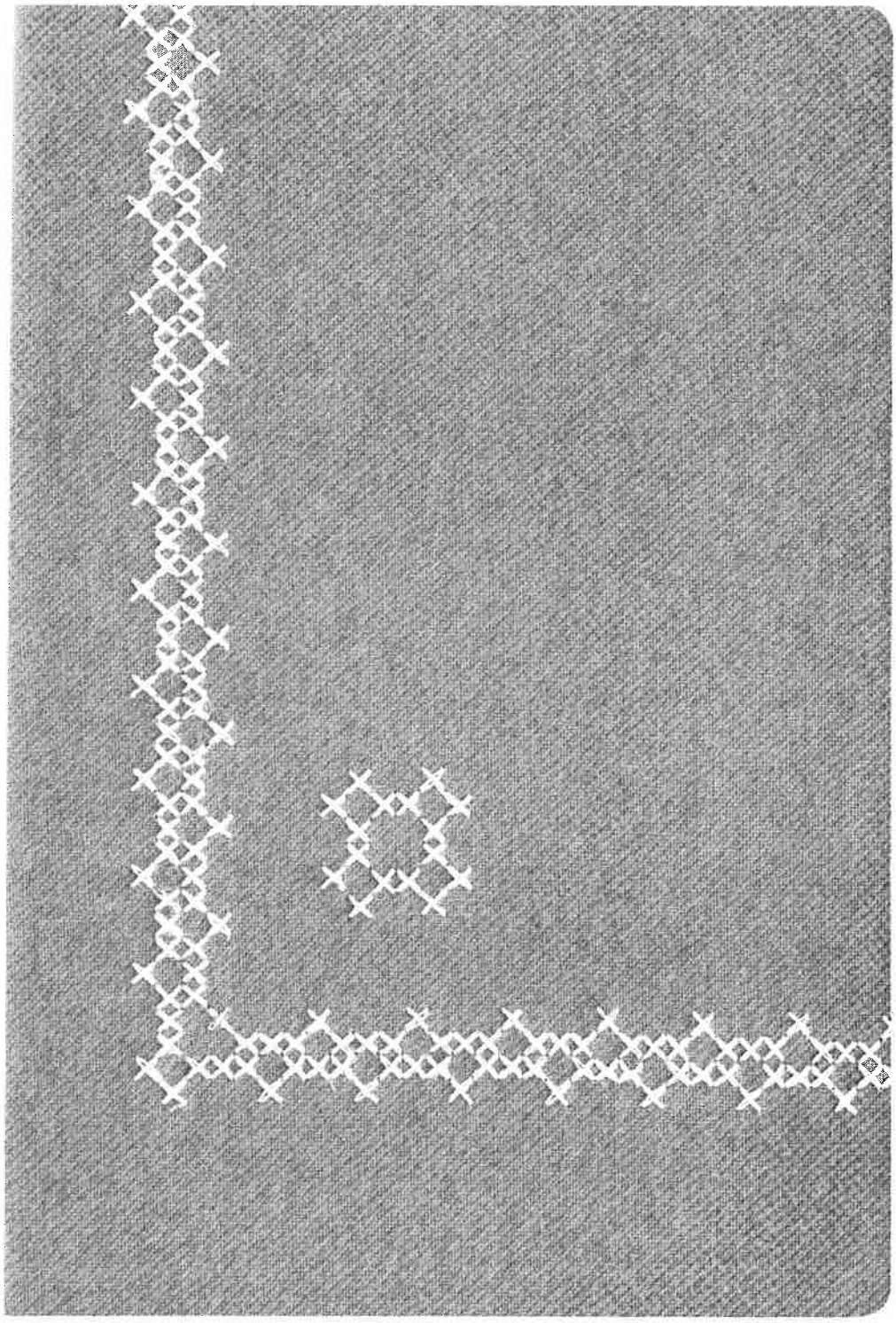

77 B

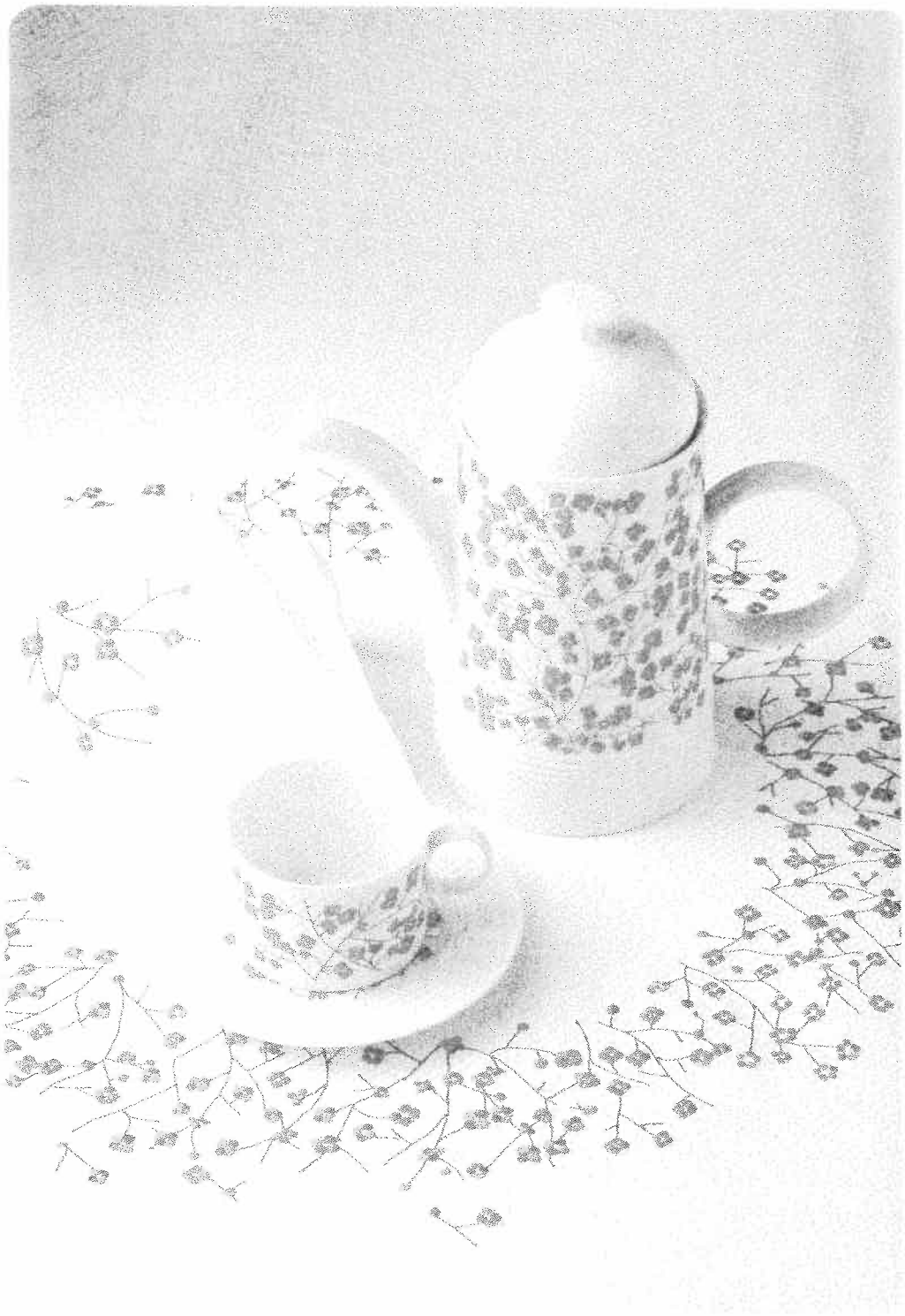

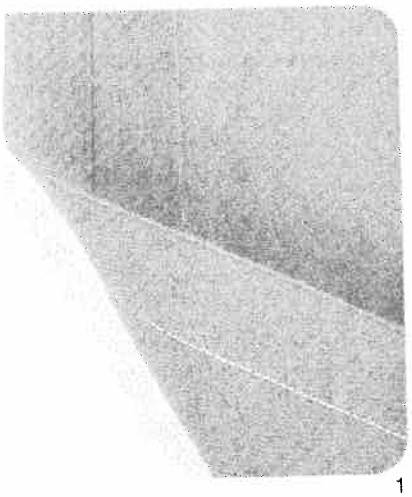

1

Straight stitch

prog			
00		3 – 5	0

Sew normal materials with straight stitch. Select stitch length longer or shorter according to sewing work. Raise the sewing foot higher for difficult materials or several material plies. It is then easier to place the work under the sewing foot. Do not forget to lower the presser bar lifter, in order to ensure perfect sewing results.
Certain work can be carried out easier with a change of needle position (see page 77).

Stretch triple straight stitch

prog			
02		3 – 5	0

You need elastic straight stitch seams (press-open seams) for all stretchable materials and seams subjected to great stress, e.g. inside seams on trousers, ski-wear and swimwear (Fig. 1).

Zigzag stitch

prog			
10		3 – 5	0

Stitch width: *1.0 mm*
Stitch length: *1.5 mm*

A stretchable seam can also be attained with a narrow zigzag stitch. It is applied especially in the case of jersey materials (Fig. 2).

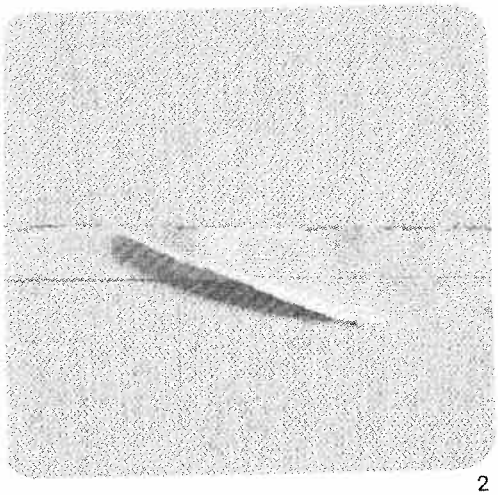

2

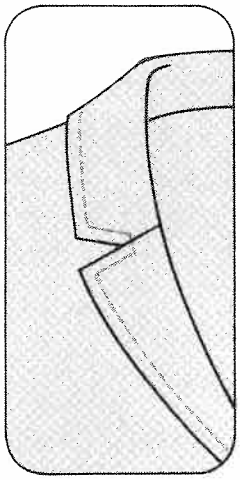

1

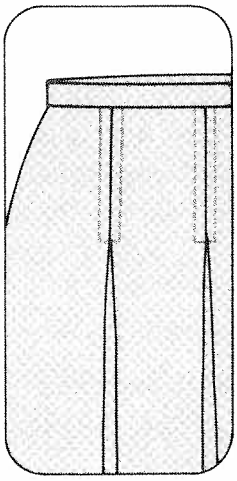

2

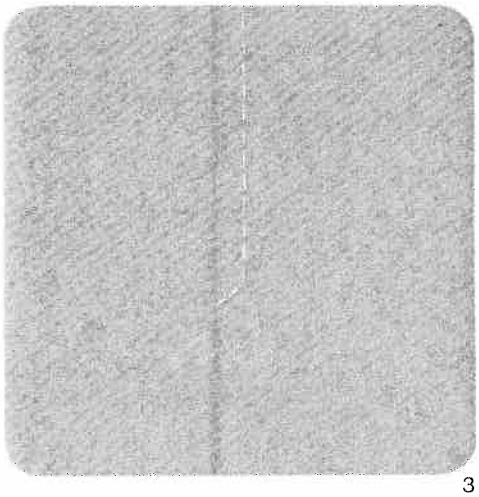

3

Top-stitch seams

Buttonhole thread as needle thread

prog			
00		5–6	0

Needle: *100/120*
Needle thread: *buttonhole thread*
Bobbin thread: *sewing thread*
Stitch length: *longest stitch*

Top-stitch seams produce nice ornamental effects. For this, selection of a suitable thread is important. To obtain particularly prominent seams, we recommend using buttonhole thread.

Buttonhole thread as bobbin thread

prog			
00		6–7	0

Buttonhole thread can also be wound on the bobbin and used as bobbin thread. In this case, sewing thread should be used in the needle. For this sewing job the needle thread tension must be set relatively high. For topstitching, the fabric is placed in the machine wrong side up. Select the longest stitch.

- For topstitching, a No. 80 needle may be used.
- For difficult top-stitch seams we recommend using the straight-stitch foot (special accessory).
- Before you fit the straight-stitch foot, set the needle at its central position.

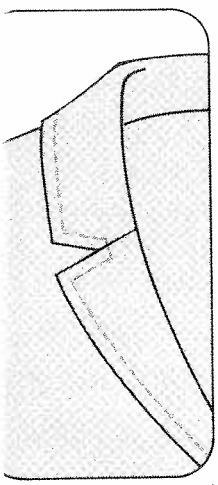

1

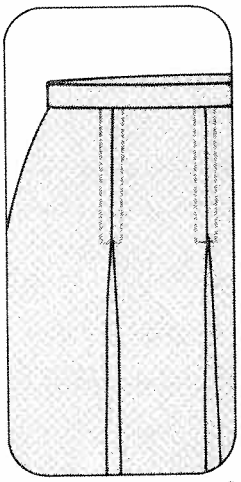

2

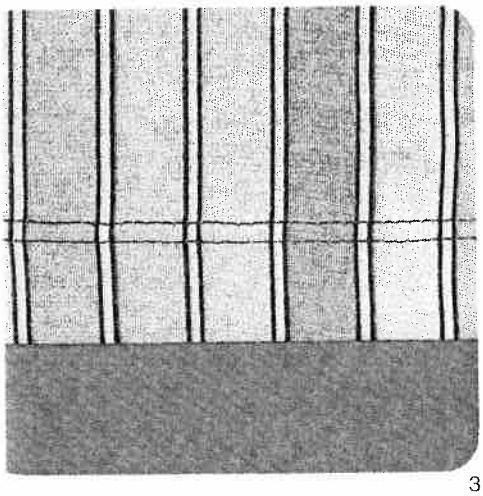

3

Top-stitch seams sewn with two needle threads

prog			
00		3 – 5	0

Stitch length: *6.0 mm*
Needle: *80*
Thread: *sewing thread*

If you cannot find a suitable buttonhole thread for a specific sewing job, try to use needle threads together. Place one thread to the right, and the other to the left of disc "C", **but thread both together through the needle eye (see page 58).**

Triple-fancy-stitch seams

prog			
03		3 – 5	0

Stitch length: *6.0 mm*
Needle: *80*
Thread: *sewing thread*

- This stitch can be used without any difficulty for sewing a top-stitch seam along lapel and pocket edges or sewing an ornamental seam (Figs. 1 + 2). For this, normal sewing thread is used.

Twin-needle top-stitch seams

prog			
00		3 – 5	0

Needle: *twin needle;*
needle gauge, as desired

The twin needle can be used not only for embroidery work, but also for top-stitching operations. It produces a particularly attractive effect along hem edges and on facings.
Fold the bottom edge, the facing or border edge over to the wrong side and baste it down. Sew on the right side of the fabric with the twin needle. Trim away the excess material on the wrong side. (For threading instructions see page 58).

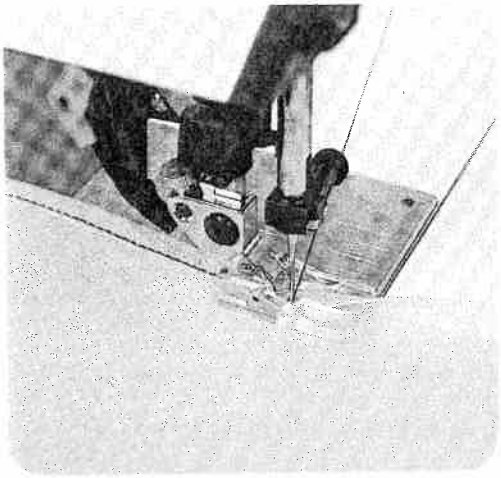

2

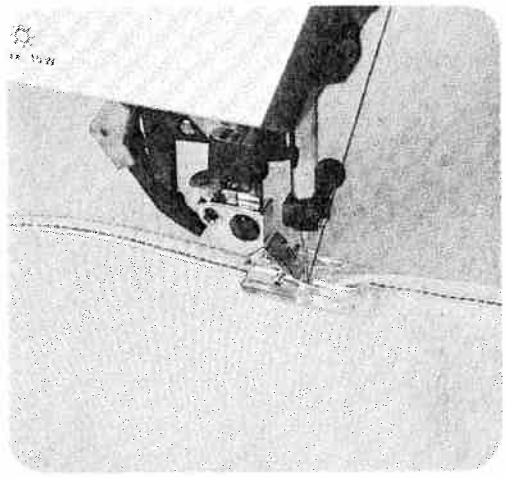

3

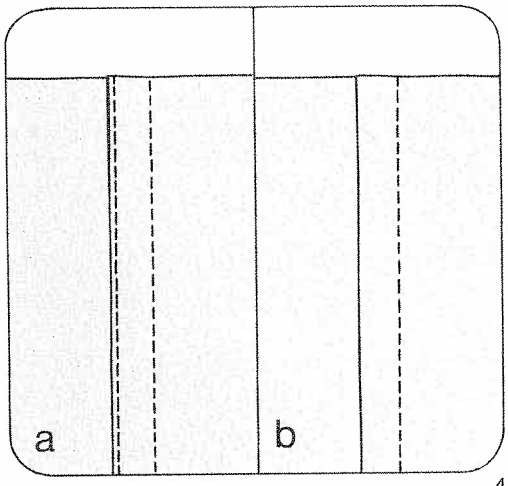

4

Lap-seam felling

Imitation lap seam sewn with the ordinary sewing fo

prog			
00		3 – 5	0

Place the two pieces of fabric one on top of the oth with their right sides facing, and sew them together abo one centimetre from the edge. Neaten the raw edge. Fo the seam allowance over to one side and press. The top-stitch on the right side of the fabric, using the edge the sewing foot as a guide (Fig. 1).

Double lap seam sewn with the felling foot

prog			
00		3 – 5	*

* Felling foot

If two lines of stitching are to appear on the right sic of the lap-seamed fabric, the two pieces of fabric mu be placed together with their **wrong sides** facing (Fig. 4 a If only one line of stitching is to appear **on the right sic** of the lap-seamed fabric the two pieces of fabric must b placed together with their **right sides** facing (Fig. 4 b

First workstep

Place the two pieces of fabric one on top of the oth with the bottom ply protruding by the width of the cutout the felling foot. Make sure the protruding edge enters th felling foot so that it is folded and stitched down (Fig. 2

Second workstep

Open the two pieces and insert the seam ridge in th felling foot. The ridge is folded down in the foot an stitched down along the edge. Pull both fabric plies apa lightly during sewing (Fig. 3).

- Two felling feet are available as special accessorie for stitching margins of 4.5 and 6.5 mm.

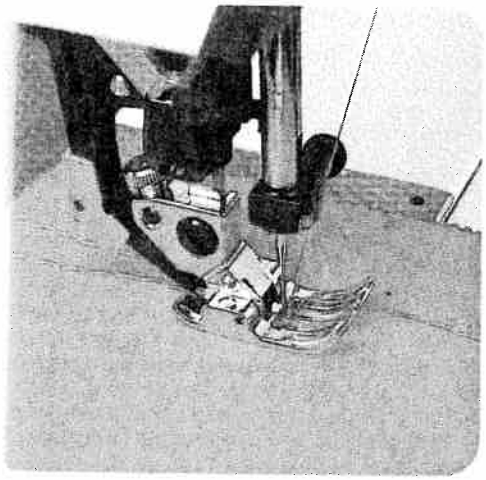

1

2

Shirring
with straight stitch

prog			
00		-3	0

Stitch length: *4 mm*

In order to obtain consistent gather with straight stitch it is imperative to insert 2 to 4 shirring threads. First mark the starting line for the shirring on the face side of the fabric. Sew the first seam straight and carefully. During sewing, pull the fabric taut a little with your hands, because with long stitches the seam will pucker easily (Fig. 1).
After sewing, leave about 15 cms of thread hanging. The next two or three seams can be sewn at about sewing-foot width.
Finally take hold of all underthreads and pull them. By this means you determine the amount of gather yourself. Please do not use fine threads, in order to ensure they do not break during gathering. Do not forget to tie off the threads at the beginning and end of the seams afterwards (Fig. 2).

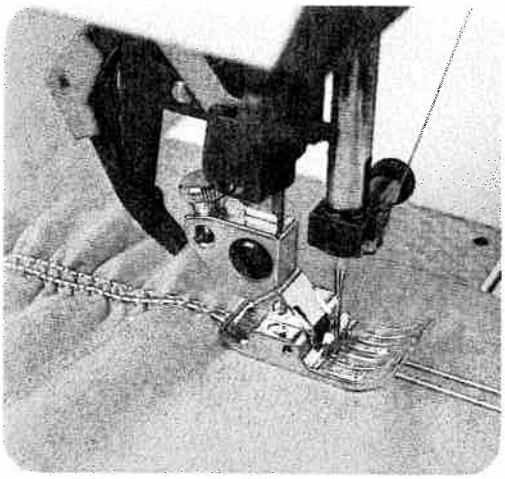

1

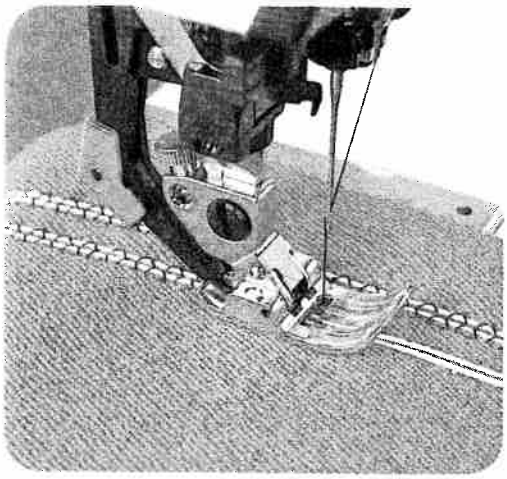

2

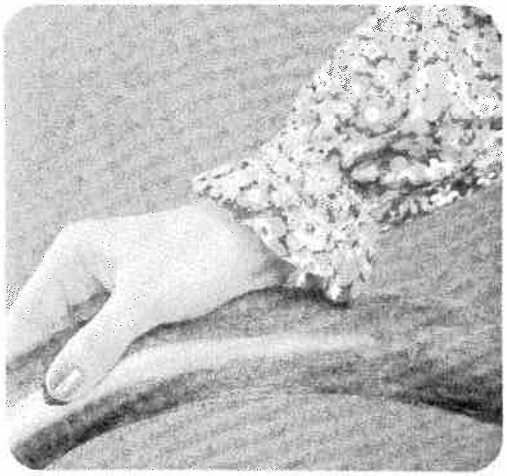

Shirring with elastic thread

prog			
15 17		3 – 5	2 or *

* Cording foot (special accessory)

First mark the starting line for the shirred seam on the underside of the fabric. Insert the needle at the seam beginning point and place an elastic thread around the needle. Insert the elastic thread in the groove of the sewing foot in use. Lower the presser foot and sew a number of seams at about foot width. Ensure that the elastic thread is not pierced during sewing and do not stretch it. Finally pull the threads with your hand, and determine the amount of gather yourself. Knot the threads on the inside (see Fig. 1).

Instead of elastic thread it is also possible to use heavy cotton thread (see Fig. 2).

Pull the fabric to the required width and stitch the threads down. This provides you with a fixed shirred edge.

- This work can be carried out with dual feed and sewing foot No. 0.

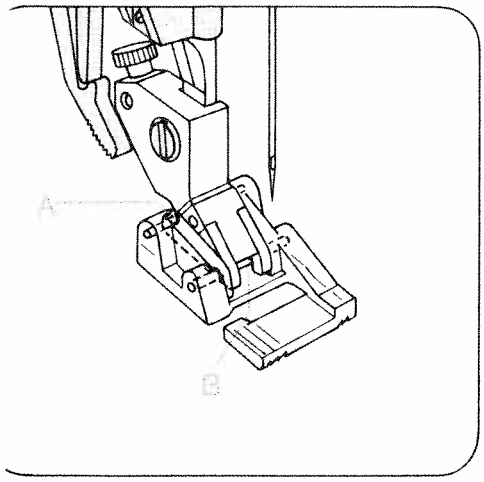

2

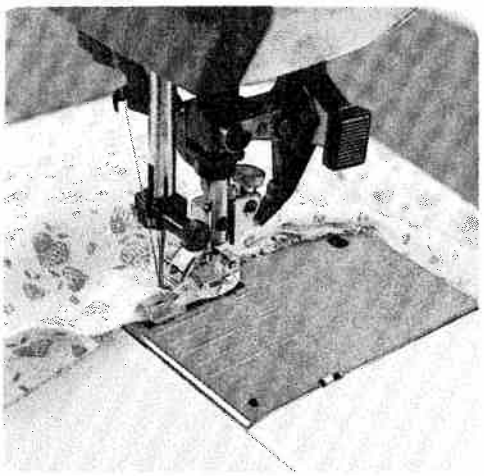

1

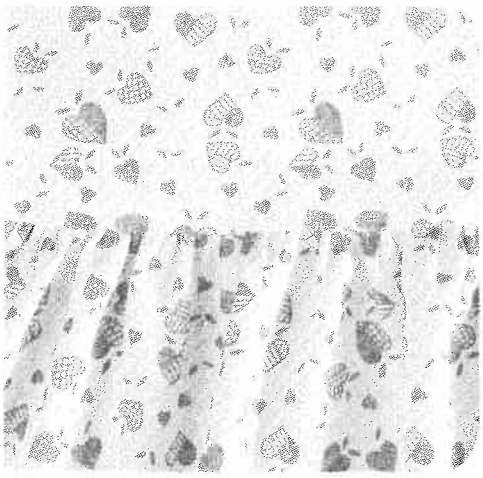

Gathering with shirring foot

(special accessory)

prog			
00		-3	*

* Shirring foot

Stitch length: *3 – 4 mm*

How to insert the shirring foot

Insert the shirring foot with its rear pin in groove "A" and push the shoe upwards so that front pin "B" snaps in (Fig. 2).

How to gather

Both outer fabric and the material to be shirred are sewn together with the shirring foot in one work-step. Ensure that the gathered material always goes under the foot and the smooth outer fabric in the foot cutout (Fig. 1). Lightly stretch the outer fabric during sewing; by this means you determine the degree of gathering.

How to disengage the foot:

Raise the presser bar lifter. Disengage the sewing foot. Press up and hold the presser bar lifter and remove the sewing foot to the rear.

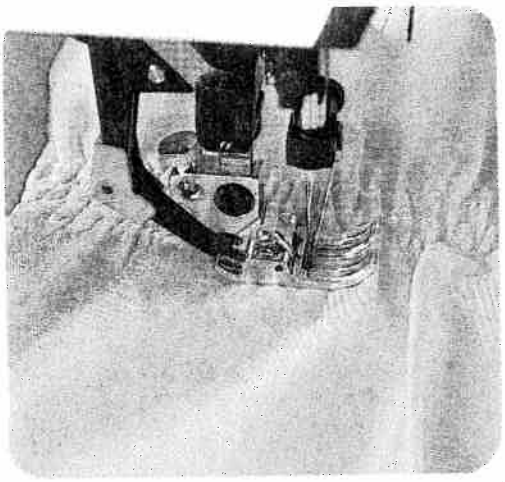

1

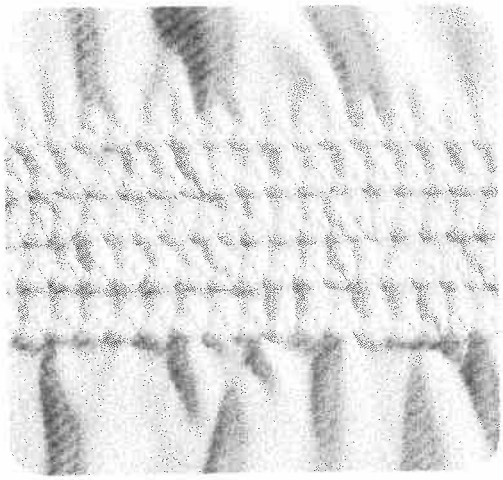

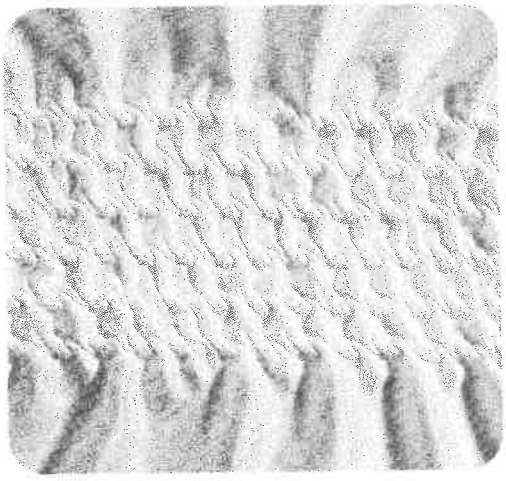

Smocking with elastic thread

prog			
00		3 – 5	0

Stitch length: *3 to 4 mm*
Bobbin thread: *elastic thread, (wind tension-free on bobbin)*

For sewing with elastic threads we recommen buying an additional bobbin case.
Because elastic threads are much thicker than a ordinary bobbin thread, the tension on the bobbi case has to be set looser. The greater the bobbi thread tension the greater the shirring effect.
The most suitable fabrics are nylon, satin, batist and fine-knit fabrics. The amount of gathering ca be determined by testing on a piece of waste fabric Sew the seams at about foot width. Tie off the seam on the reverse fabric side at the beginning and en of the seams (Fig. 1).
If there are several parallel seams, the materia must be stretched to its original width during sew ing, otherwise the shirring will turn out irregula Do not forget to carry out a sewing test.

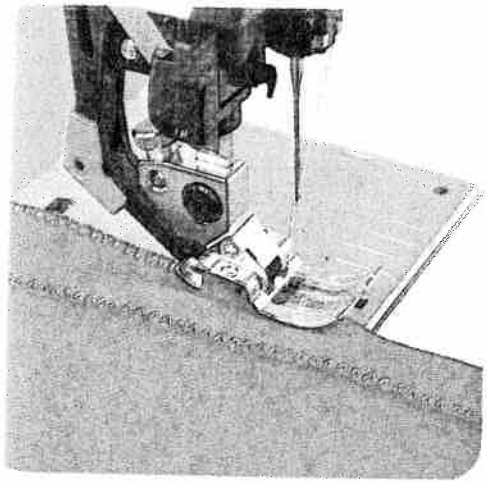

1

Serging with zigzag stitch

prog			
10		3 – 5	0

Stitch-width: *as required*
Sewing thread: *Embroidery darning thread or sewing thread*

The stored zigzag-stitch is suitable for serging of light materials. The more difficult the material, the wider the stitch width must be selected for the zigzag stitch. Ensure that the needle passes outside the outer edge during sewing. In this way the material edge is properly serged and well covered (Fig. 1).
For heavy or easily fraying materials, use:

- Program: 15 or 09 (Fig. 3).

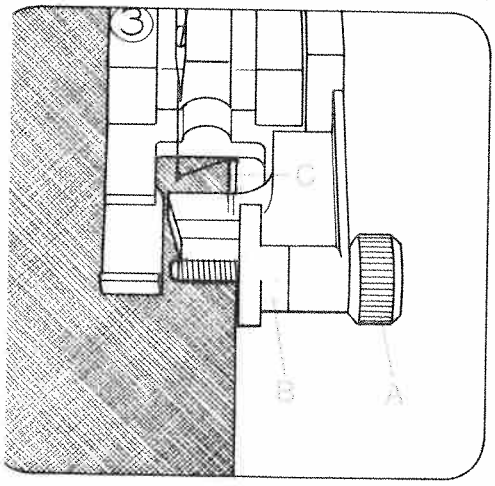

2

Serging with overlock foot

For materials which contract during serging use the overlock foot.

prog			
11		3 – 5	3

Stitch-width: *as required*

Serge the raw edge with the required zigzag stitch. The material enters at the red marking on the sewing foot (Fig. 2).

- **Preperation of the sewing foot (overlock foot No. 3)**

Turn screw "A" fully to the front. The red mark "B" is then on the right sewing foot side. Allow the edge of the material to be sewn to enter close against the red mark. During sewing, the thread places itself over the wire "C". By this means you will receive a beautiful smooth seam (Fig. 2).
For change of needle position for zigzag stitch see page 77.

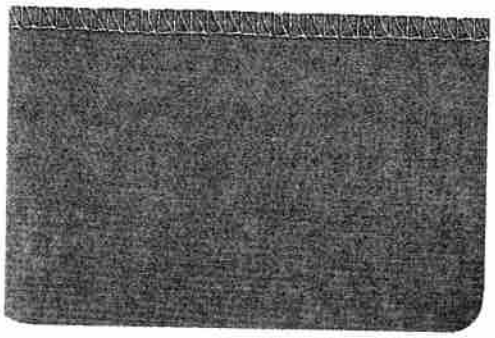

3

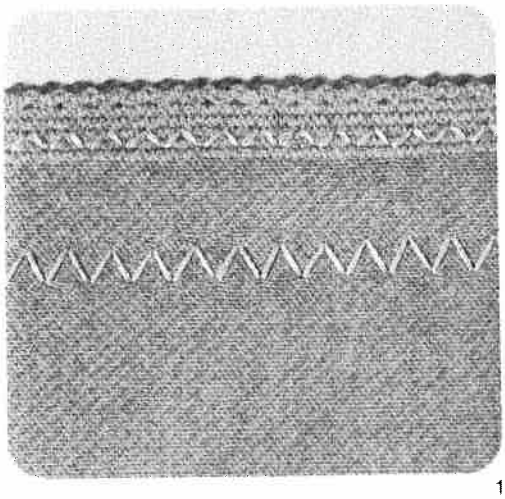

1

Stretch triple zigzag stitch Lycra stitch

prog			
19		3–5	0

Needle: *130/705 H 80 or 130/705 H SKF 80*

Stitch width: *as required*

With the above-mentioned programs it is possib to repair elastic tapes, or join them, on underwe bathing wear and high-stretch materials such Lycra and difficult synthetic fabrics.
Select the appropriate stitch width for the applic tion. For this work it is recommended to use fi sewing threads (Fig. 1).

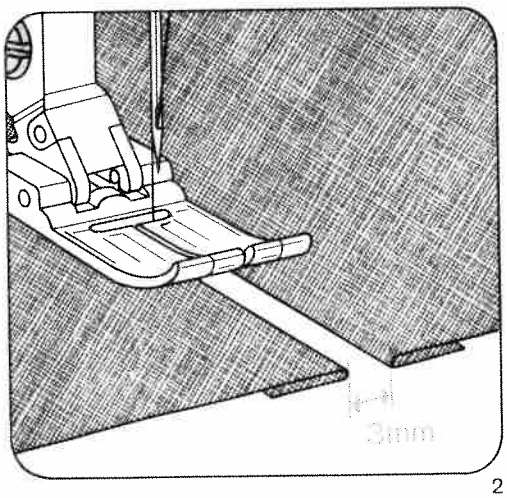

2

Faggotting stitch for corsetry

prog			
20		3–5	0

Needle: *130/705 H 80 or 130/705 H SKF 80*

With faggotting stitch it is possible to sew a high elastic seam with hem-stitching effect. Tack ov the edges to be sewn and place them under t sewing foot with a clearance of 3 mm (Fig. Over-stitch using program 20. The needle mu penetrate the material to the right and to the l (Fig. 3).

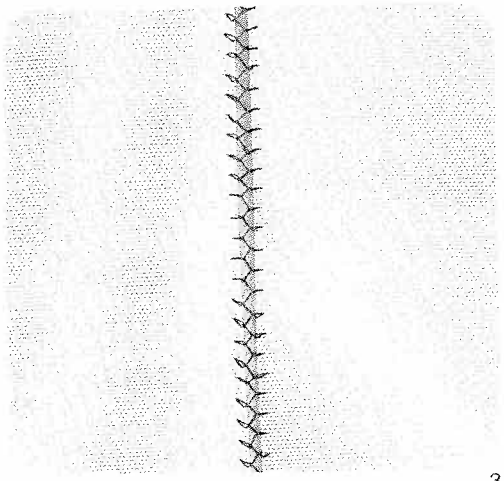

3

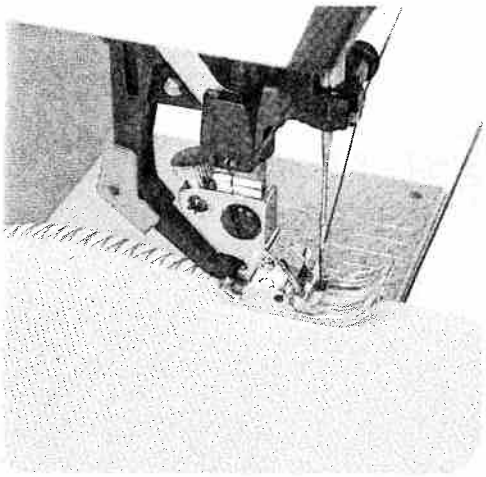

1

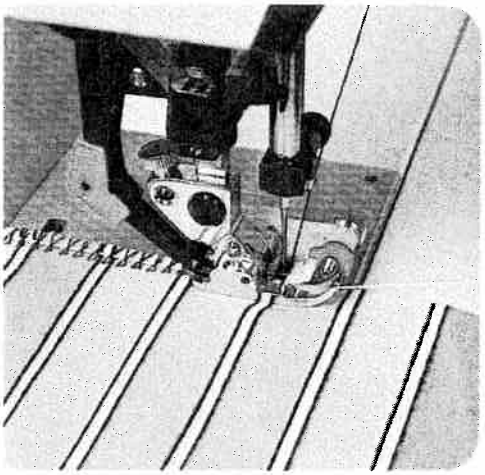

2

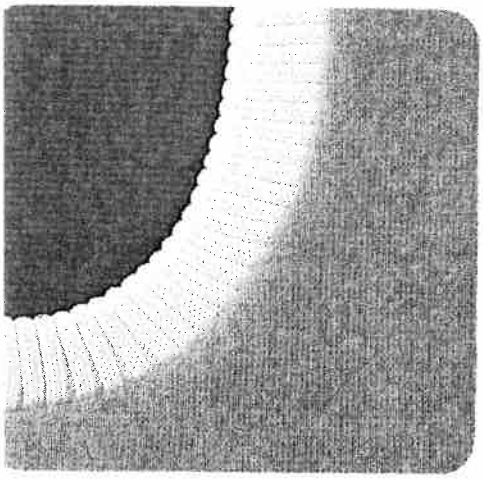

3

Assembly and serging seams

Seams which are not ironed open can be sewn together and serged in one workstep.
The Pfaff Creative 1371 offers a selection of different elastic assembly and serging seams from which you can easily select the corresponding seam for all stretchable materials.

Closed overlock stitch or overcasting stitch

prog			
09 16 07		3–5	0/3

Material: Jersey

Especially jersey materials can be sewn together and serged in one workstep with the recommended stitches (Fig. 1).
Sleeve cuffs or knit collars can be sewn on with the above-mentioned programs in a wear-resistant manner just the same.
Place the pieces of fabric under the sewing foot so that the needle descending in its right position stitches just beyond the fabric edge. As a result, the fabric edge is overcast while the pieces are being joined (Fig. 1).

Sewing neck openings: Measure the required width and close the stand at the correct curvature and press open the seam, fold over in lengthwise direction and pin onto neck cutout from face side. The raw edges of the knit facing are placed on the raw edge of the cutout. In one workstep, knit facing and cutout edge are sewn together (Fig. 3). In order to avoid waviness in the case of loosely woven materials, insert an elastic thread. By this means, the seam keeps its original shape (Fig. 2).

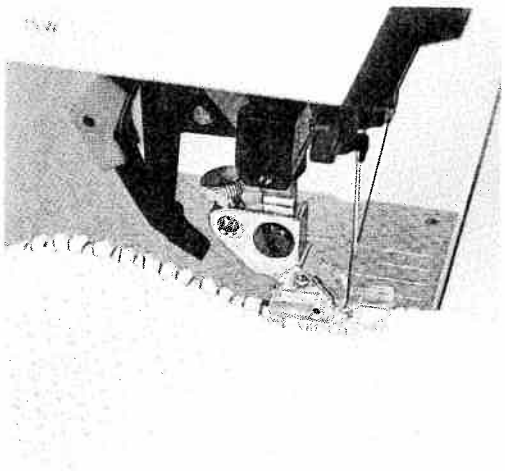

1

Closed overlock stitch

prog			
16		3 – 5	*

* Knit-edge foot (special accessory)

Needle: *70 or 80*

The sole of the knit-edge foot is concavely relieved. This makes it easier to join heavy knitted fabrics because the material enters the relieved portion of the sewing foot sole. Place the material under the sewing foot, as shown in the illustration, so that the needle just stitches over the fabric edge, as it descends on the right of its throw (Fig. 1).

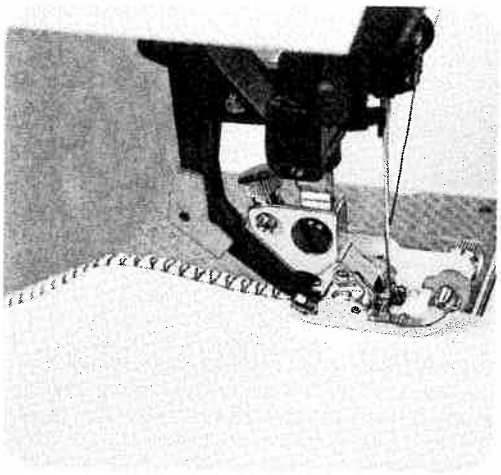

2

Overlock stitch with edge-thread effect

prog			
09		3 – 5	3

Stitch length: 3.0 mm

Place the two pieces of fabric together with their right sides facing. Then insert the material in the machine, positioning the raw edges under the sewing foot, as shown in Fig. 2. Make sure the needle stitches just beyond the fabric edge, as it descends in its right position. In this way, the edge thread is placed over the raw edge and serves as an edge protection.

For setting overlock foot No. 3 see page 87.

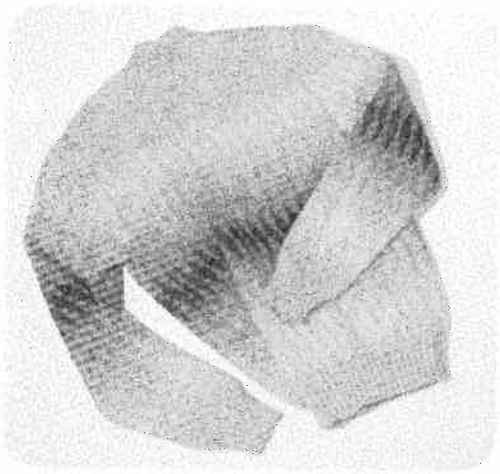

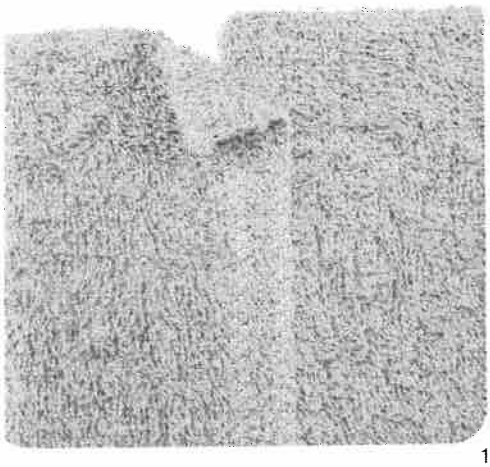

1

Honeycomb stitch

prog			
18		3–5	0

Overlap the fabric edges by 1.5 cm, then neaten each raw edge with:

- Program 18
- Stitch-width 6.0 mm
- Stitch length 2.0 mm

Elastic stitch

prog			
15		3–5	0

Overlap the material edges by 1.5 cm and over-stitch each edge with:

- Program 15 and
- stitch length 0.5 mm (Fig. 2).

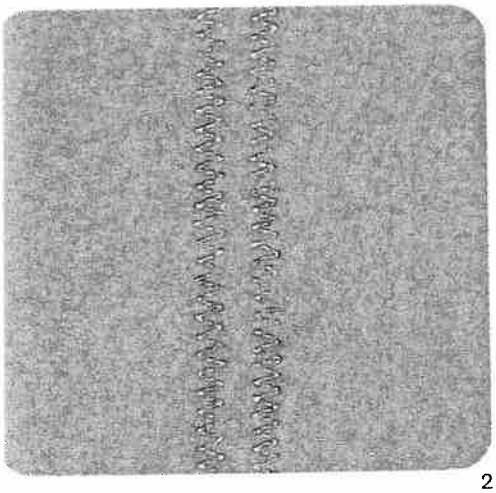

2

Elastic stitch (for underwear)

prog			
15		3–5	0

Cut off the stretched elastic tape close to the edge. Gather the fabric to the waist size using straight stitch. Push the part prepared in this way between the elastic tape and pin it firmly. Stitch it on using elastic stitches. Finally over-stitch the closed and rounded tape elastic stitches (Fig. 3).

Elastic straps (outerwear)

prog			
15		3–5	0

On skirts or trousers sew the strap onto the prepared edge with elastic stitches.

3

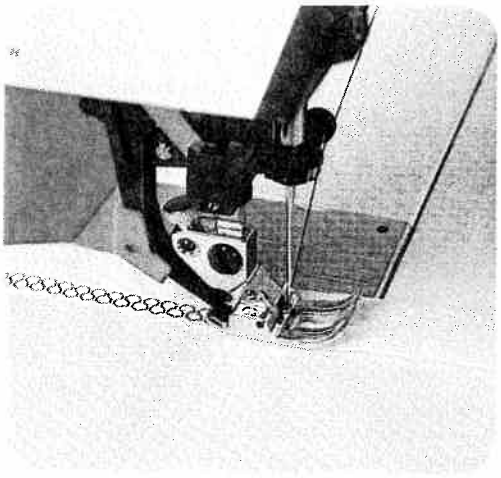

1

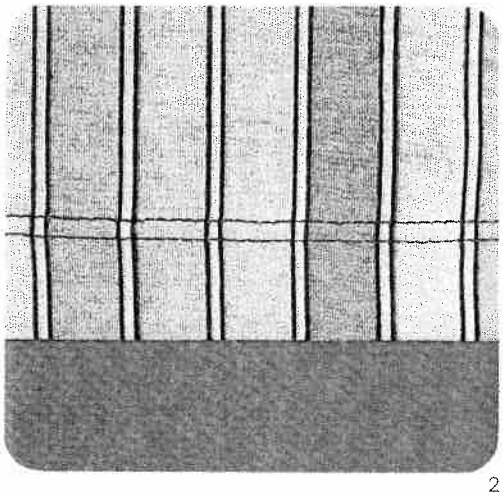

2

Honeycomb stitch

prog			
18		3–5	0

Honeycomb stitch is especially suitable as a mean of securing hems on stretchable lining materials Fold the hem double up to the hem edge and over cast with honeycomb stitch (Fig. 1).

Securing hems with the twin needle

(T-shirt seam)

prog			
00		2–3	0

Needle: double needle, 4 mm distance

For a 2 cm hem, turn over and baste about 2.5 cn of material. Stitch on the face side at about 2 cn width. Cut off the protruding material edge on the inside along the seam (Fig. 2).

For threading instructions see page 58.

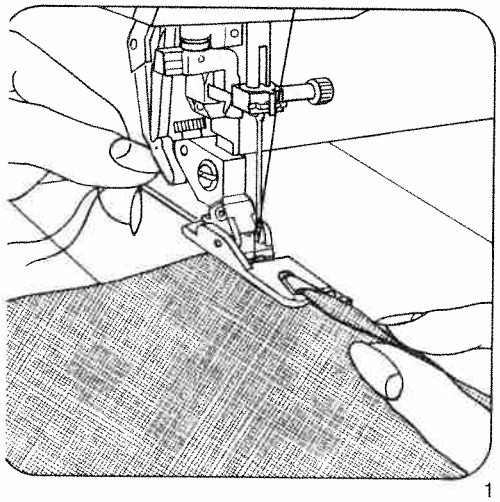

1

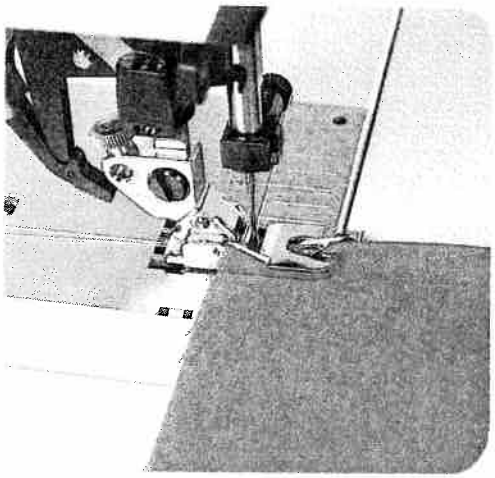

2

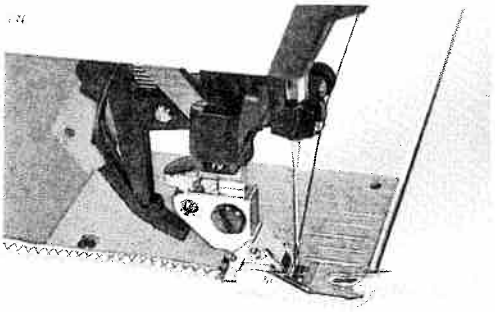

Binding edges with the hemmer

prog			
00		3 – 5	*

* Hemmer foot (special accessory)

Hemming secures the fabric edge against fraying and produces a neat and durable edge.
The hem width is about 3.5 mm.
Begin by folding the fabric edge over twice and placing the folded edge under the hemmer foot. Lower the foot and secure the hem in position with a few stitches.
Fig. 0 shows how the fabric is drawn into the hemmer foot scroll with the aid of the stitched-down threads.
Fig. 2 shows how the fabric edge is fed into the hemmer foot scroll. Hold the fabric tight as you guide it during sewing. Make sure the fabric contacts the edge of the right half of the hemmer foot as it enters the scroll.

Binding edges with the roll hemmer

prog			
10		3 – 5	*

* Roll hemmer (special accessory)

Use the roll hemmer foot for hemming nylon, tricot and chiffon. Begin by stretching the fabric to see which way the edge curls. This is the side to which the hem must be rolled. Draw the fabric into the hemmer scroll with the aid of sewn-on threads.
Set the stitch width just wide enough that the needle stitches close to the drawn-in hem edge (Fig. 3). In this way, an attractive shell edge effect is obtained.

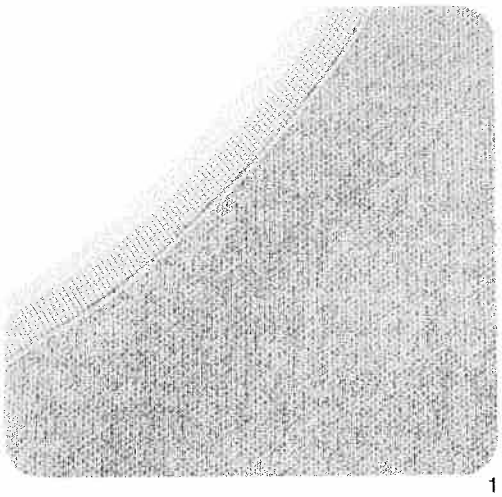

1

Binding edges with non-woven tape

prog			
00		3 – 5	0

Fold ready-made bias binding lengthwise and shape-press. Push the folded binding over the fabric edge and baste it in place, if required. Then sew it on with straight stitches (Fig. 1).

Edge-binding with the binder

Sewing foot: *Binder (special accessory)*
Program: *00*
Stitch length: *2.5 mm,* (Fig. a)
or
Program: *10*
Stitch-width: *2.5 mm*
Stitch length: *1.5 mm,* (Fig. b)

Remove sewing foot and screw on binder. Insert the bias tape in the scroll of the binder and pull it out to the rear. Set the binder in such a way that the needle enters 1 to 1.5 mm from the turned-in bias edge. Sew a number of stitches along the bias tape. Place the raw edge in the groove of the binder. During sewing, the bias tape is wrapped automatically over the material edges. Sew the bias tape on with the above mentioned program or a program of your own selection. Straight material edges are the simplest to bind (Fig. 2).

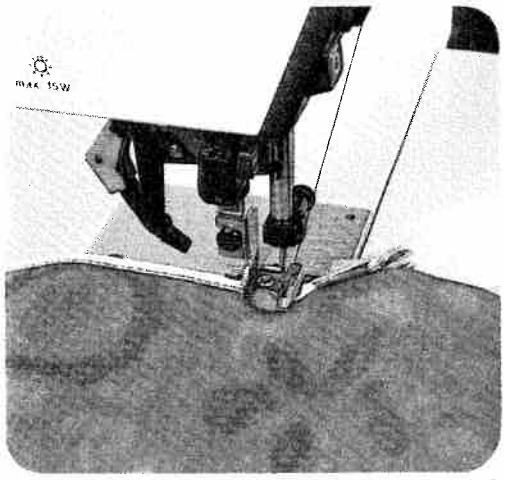

2

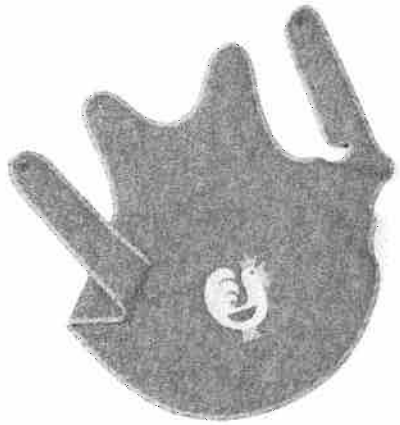

a

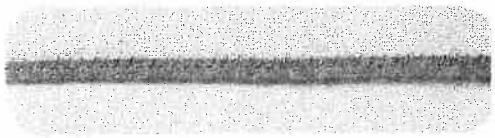

b

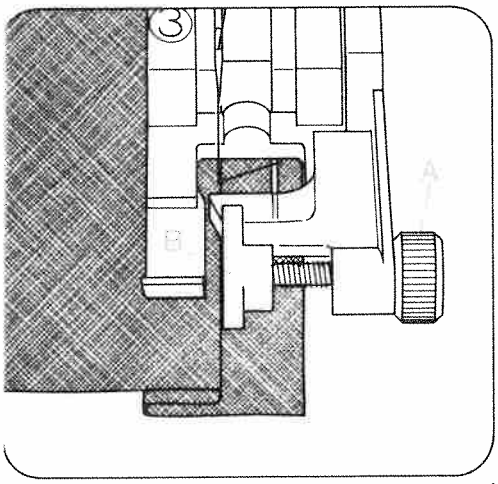

1

Blind stitch

prog			
05		-3+	3

Fold the previously overcast raw edge over to form a hem of the desired width and baste about 0.5 cm from the fabric edge. Place the fabric under the blindstitch foot and sew, making sure the folded fabric edge runs along edge guide "B" of the blindstitch foot (Fig. 2 + 2a).

Before you start blindstitching, adjust the needle penetration point on the folded fabric edge.

To do this, adjust the position of edge guide "B" by turning regulating screw "A" so that the needle catches only one thread in the folded edge when it makes its left stitch. Sew a trial seam on a piece of scrap material first (Fig. 1).
Then proceed as described above.

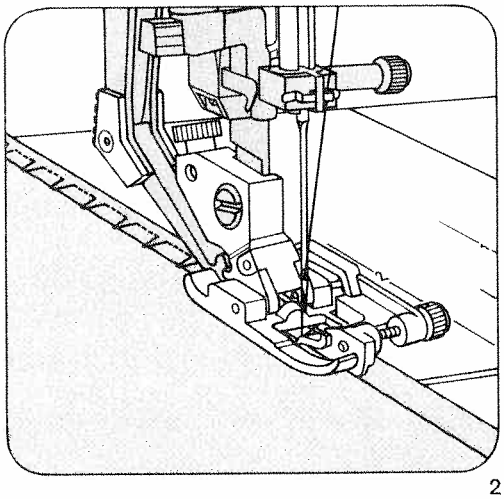

2

Blind stitch

(for elastic materials)

prog			
06		-3+	3

Program 06 is suitable for stretch fabrics. First fold the hem to the desired width. Adjust the needle position as described above (Fig. 2b).

- Then start hemming, following the instructions given above.

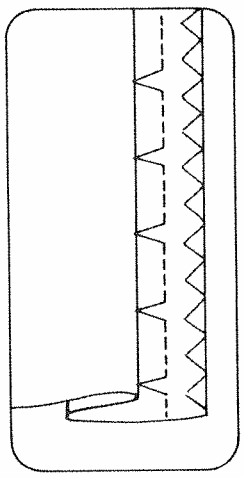

2 a

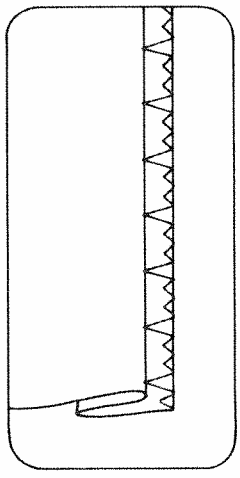

2 b

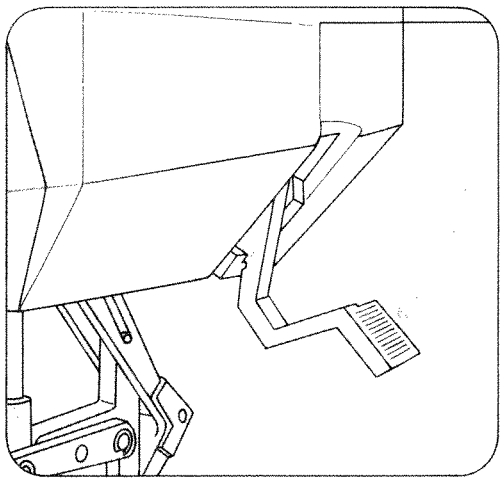

1

Darning with straight stitch

prog			
00	——	2 – 3	6

Feed dog: *lowered*
Presser bar lifter: *in darning position*
Sewing-cotton: *embroidering and darning thread*

Darning position (Fig. 1):
Lower presser bar lifter "A", at the same time pushing it back slighty until it enters notch "B" at the bottom of its slot.

Attach the darning foot (Fig. 2):
Raise the needle. Push lever "E" towards the back and hold it there. Insert the pin of the foot in hole "C" and insert the foot so that it rests against its stop. When you do so, guide fork "G" fits around the presser bar. Release clamp "E", which then moves down onto retaining screw "F". Tighten screw "D".

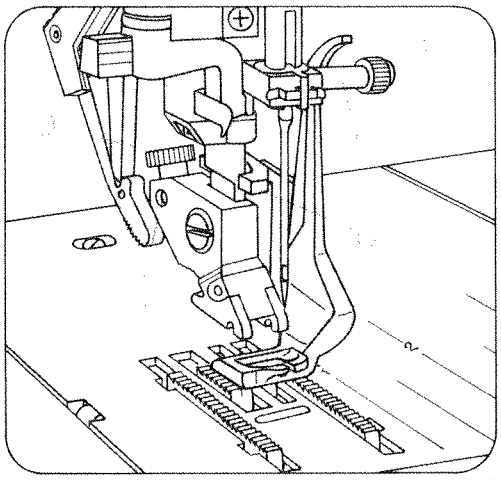

2

Draw up the bobbin thread. Hold both threads until the machine has made a few stitches. First sew a few stitches in the unworn area of the fabric. Then stitch over the damaged spot from one side to the other in serpentine fashion, placing the lines of stitching close together (Fig. 3). When the damaged spot has been covered completely, turn the work through 90° and darn at right angles to the preceding row of stitches (see Fig. 4).
You determine the length of the darning stitches by the rate at which you move the fabric back and forth.

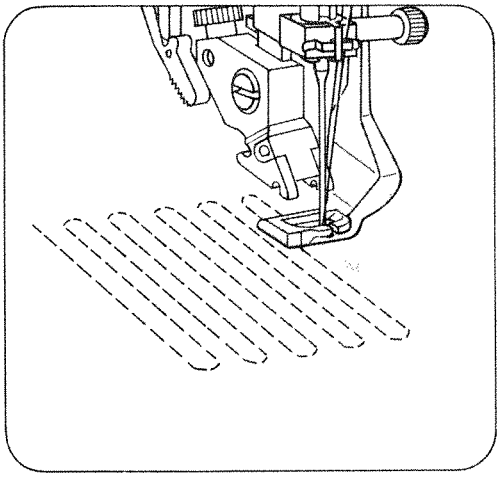

3

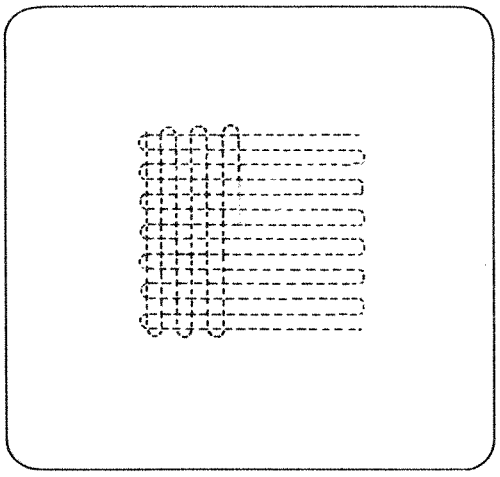

4

Darning with wool

prog			
10 15	——	2 – 3	6

Feed dog: *lowered*
Presser bar lifter: *in darning position (see page 96)*
Sewing thread: *Embroidery and darning thread, wool*

Draw the wool thread through the needle hole of the darning foot and into the thread guide (Fig. 1). Place the wool thread under the darning foot. Start at the top left and place the wool thread back and forth across the damaged area (Fig. 2).
Then cut the wool thread and sew over the rows of wool thread with zigzag stitches or an elastic-stitch seam (Fig. 3).
Do not place the lines of stitching too close together as this would make the darn too hard.
All darning work described above is carried out on the reverse side of the fabric, so that the darn looks neater on the face side.

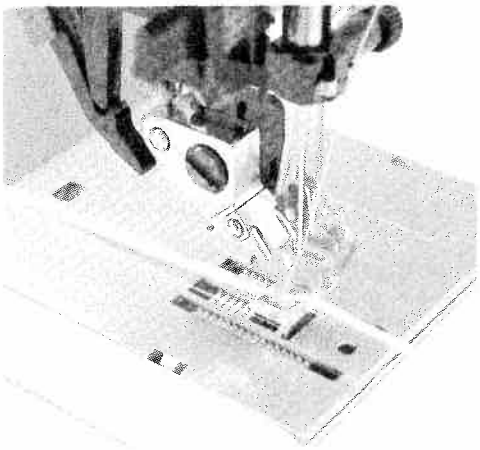

1

2

3

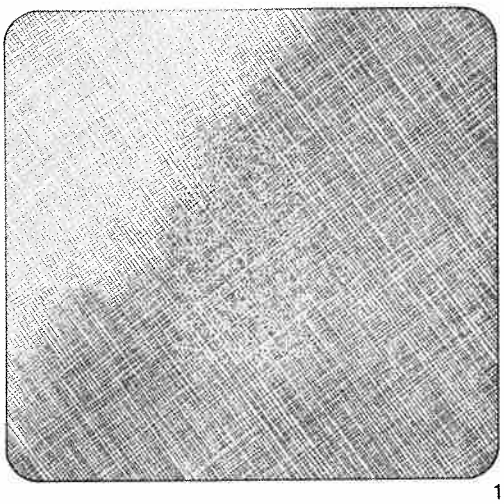

1

Darning with elastic stitch

prog			
15		3–5	0

Sew as many elastic-stitch seams over the damaged spot as may be required to cover it completely. Overlap the seams slightly (Fig. 1).

Inserting patches

prog			
15		3–5	0

Stitch length: *0,5*
Needle position: down

The new piece of fabric is pinned on the face side and the fabric edge over-sewn with the selected stitch.
To make the patch more durable you can sew a second seam at sewing-foot width from the first. Afterwards cut away the damaged material on the inside (Fig. 2).

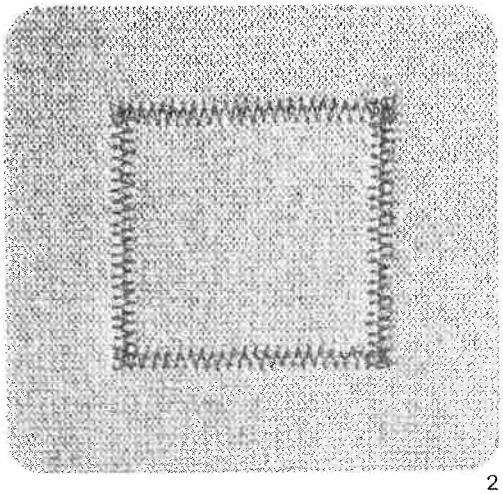

2

Darning torn fabrics

prog			
15		3–5	0

For mending tears, frayed edges and small holes, place a piece of material under the torn fabric which is larger than the damaged area. Stitch over the area at the width of the tear. The material underneath reinforces the damaged material and ensures reliable darning. Trim any protruding material on the underside close to the edge (Fig. 3).

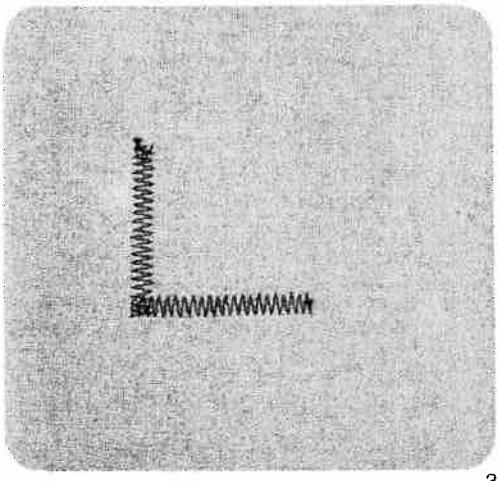

3

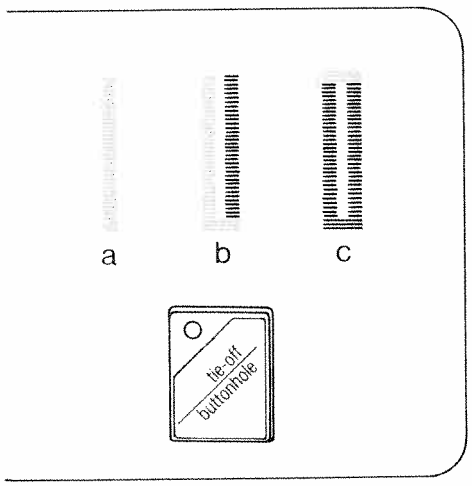

1

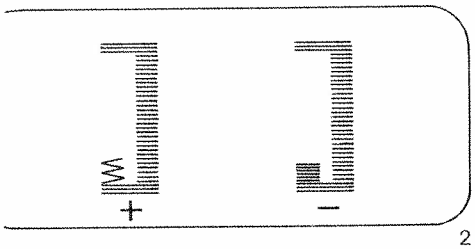

2

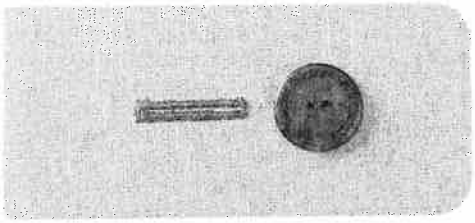

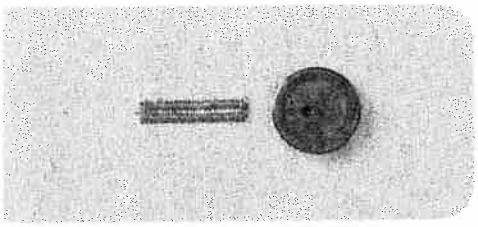

Lingerie buttonholes

prog			
13		–3+	5

Sewing thread: Embroidery and darning thread

Generally buttonholes are sewn onto double material. In spite of this, a piece of paper should be placed underneath during sewing. First mark the spacings and the distance from the edge. The points thus obtained always mark the beginning of sewing. **Pull the runner of the buttonhole foot fully to the front before beginning the buttonhole.** Sew the first lengthwise seam at the required length (Fig. 1 a). After that the Pfaff Creative sews the first bar and the reverse seam. It must be sewn at the same length as the first lengthwise seam (Fig. 1 b). Again press the key "tie-off/buttonhole" to sew the bartack. The Pfaff Creative then sews the bartack automatically and secures the seam at the end (Fig. 1 c). Now the buttonhole is stored. Without actuating further keys, all following buttonholes can be sewn.

For sewing the following buttonholes it will be good to lift the fabric a little in order not to affect feeding of the fabric. The sewing speed should remain constant.

- **If a buttonhole does not turn out properly during programming, it can be cancelled and programmed again by pressing the pattern start key.**

Balancing the density of buttonhole seams

With key 105 the left buttonhole seam can be adapted to the right one. First make a sample buttonhole.

- Sew the first buttonhole seam in the length required and
- the first bartack.
- Set balance key 105 toward + or – and adjust the second buttonhole seam to the first one (Fig. 2).
- Sew last bartack.
- The change in this way will be maintained for the following buttonholes.

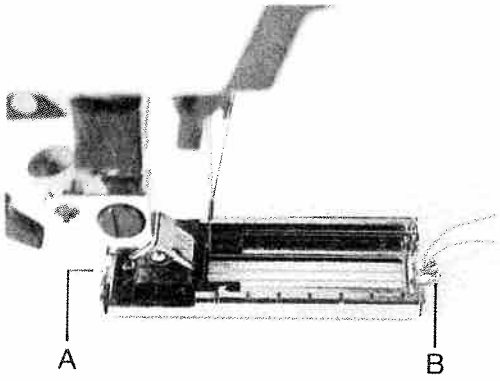

1

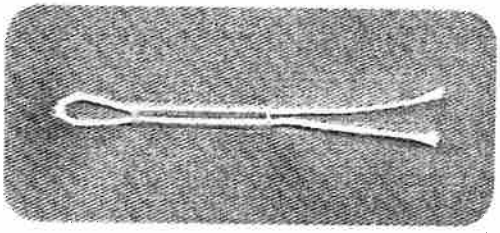

2

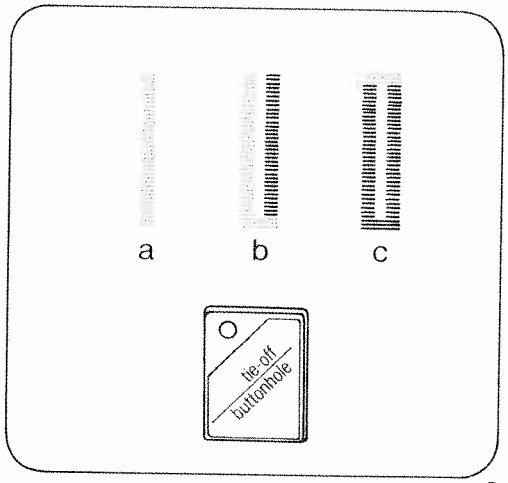

3

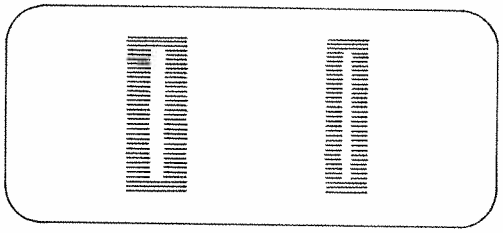

4

Changing the buttonhole stitch length

With the stitch length key (106), the buttonhole seams can be set more densely or loosely.

Buttonholes with gimp thread

In the case of elastic materials, it is possible that the button holes extend. Therefore, the buttonhole strip should be strengthened with interlining material. In order to retain the shape of the button-hole, use gimp thread if possible. Place the gimp thread over the back ridge "A", pull taut and jam it into front ridge "B" to the left and right (Fig. 1). **(Pull runner fully forwards).**

The buttonhole sequence is the same as without gimp thread, see page 99. After completing the buttonhole pull on both thread ends of the gimp thread until the loop is corvered up by the bar. This is where the button is located later. Pull the gimp threads through to the underside with a needle (Fig. 2), secure them and trim them.

Correction of buttonhole

If a buttonhole does not turn out properly during programming, it can be cleared and programmed again by pressing the pattern start key.

As you know, it is difficult to sew buttonholes in collar stands, waistband strips etc. In such cases, the buttonhole length should be drawn in previously and the first seam, bartack and second seam controlled by hand (Fig. 3). Sewing foot No. 2 can also be used for this work.

(Sewing procedure as described on page 99).

Single buttonhole

A garment may consist of different numbers of fabric plies, e.g. the buttonhole strip may consist of three plies and the collar stand of six – owing to the folded seam edge. In this case it is necessary to programme the computer for varying numbers of fabric plies in order to maintain the same buttonhole length as on the 3-ply buttonhole strip.

Changing the buttonhole width

For every fabric type, the corresponding buttonhole width can be determined up to 5.5 mm. For light materials select a wide buttonhole (Fig. 4 a) and a narrow one for difficult materials (Fig. 4 b). With the stitch width key (107), you determine the required buttonhole width. The length of the cut changes itself automatically (Figs. 3, 4, 5, 6, page 63). A buttonhole width of 4.5 mm is now stored.

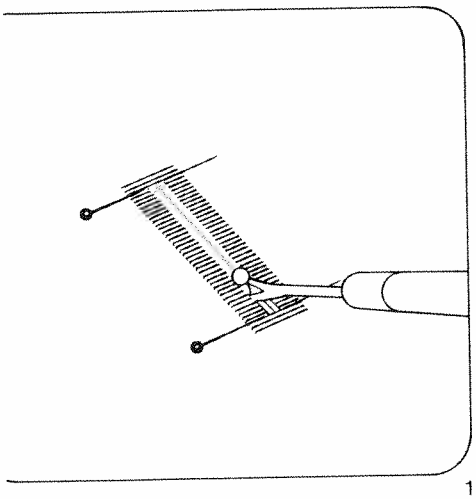

1

Cutting buttonholes open

When cutting open the buttonhole it is important not to damage the bartacks. In order to avoid this, insert a dress-pin crosswise in front of each tack. Insert the point of the ripper in the middle of the buttonhole seam and cut open one half carefully, then cut open the other half in the opposite direction. If you have no punch pliers to cut the eyelet, simply cut around the curve with a pair of pointed scissors (Fig. 1).

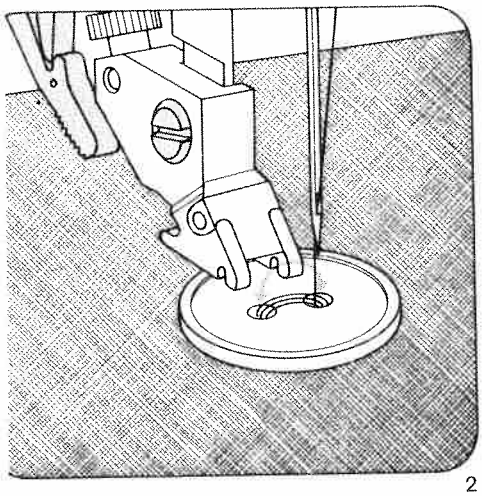

2

Sewing on buttons

prog			
14	——	3–5	–

Feed dog: Dropped

Lay the button on the mark made on the fabric beforehand and push the fabric with the button under the sewing foot (Fig. 2). Turn the hand wheel towards you and adjust the position of the button so that the needle stitches into its left hole. Lower the presser bar lifter. Turn the hand wheel and check to make sure the needle enters the right hole of the button. Then sew the button on.
After backtacking, the needle stops in its upper position.

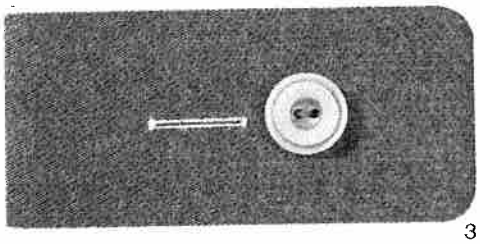

3

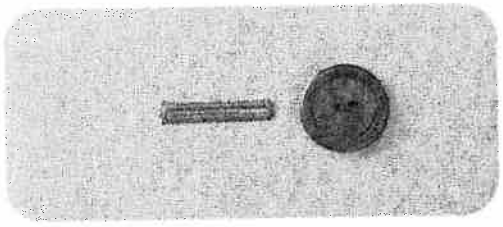

4

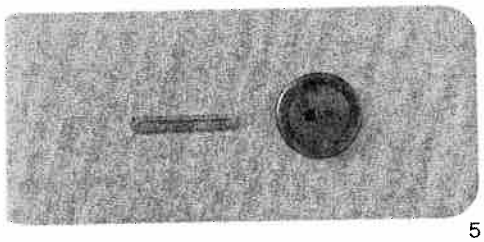

5

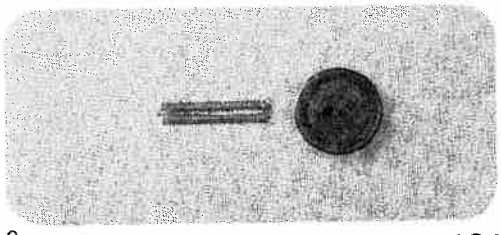

6

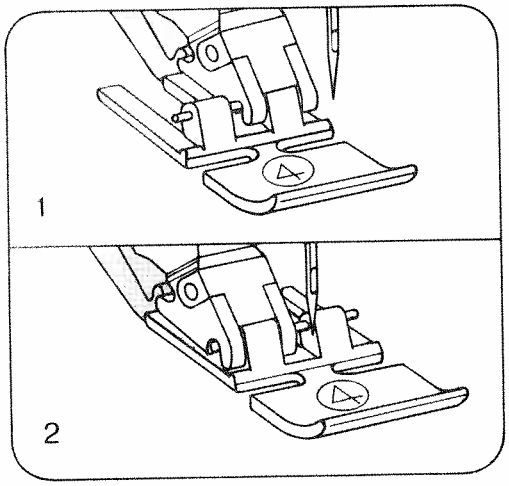

1

2

Sewing in zippers

prog			
00		3–5	4

Key: Needle down

There are different kinds of zippers: joined or split zippers and special ones for trousers or slacks. They can be inserted concealed or open, as required.

The zipper foot can be engaged on the left or on the right, depending on the work (Figs. 1 and 2).

Fully concealed zippers

Baste the zipper in first. Push the zipper foot to the left as far as it will go, place the open zipper under the foot so that its right-hand guide edge moves along the zipper teeth (Fig. 3). Sew about half the seam at the required depth, leave the needle down in the material, raise the zipper foot and close the zipper (Fig. 4). Then lower the foot again, continue stitching until you reach the end of the zipper and sew across this end.

Sew along the other side of the zipper parallel to the edge and at the same distance as the first seam. Shortly before you reach the end of the seam, leave the needle down in the material, raise the sewing foot, open the zipper (Fig. 5), lower the foot again and sew to the end of the seam.

Our sewing tip: If you lack practice, we recommend using the quilting gauge to obtain parallel seams.

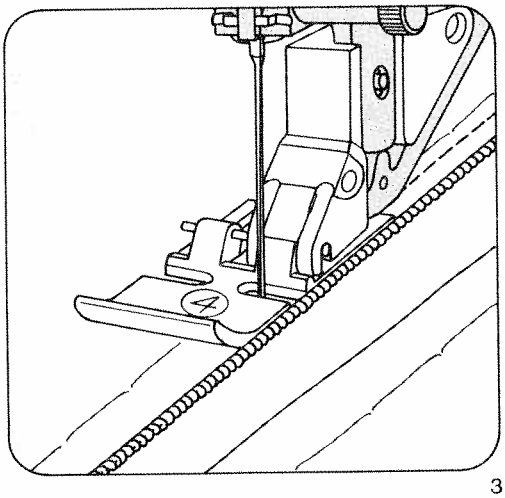

3

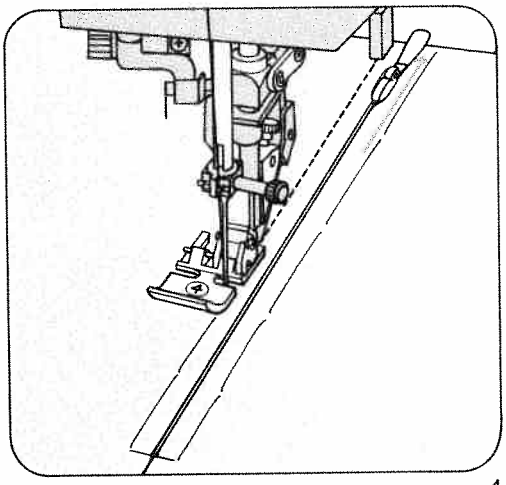

4

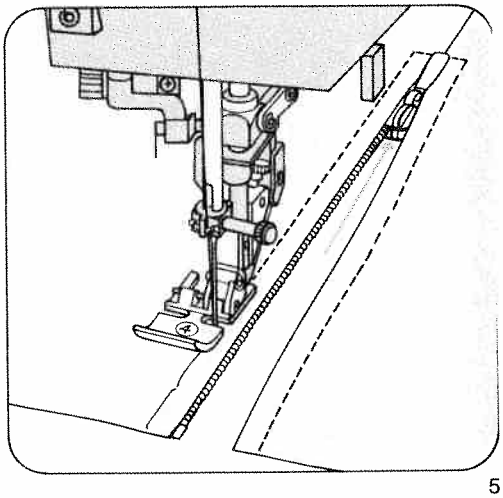

5

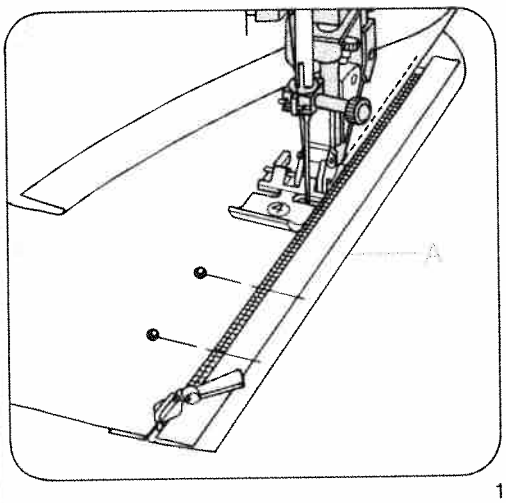

1

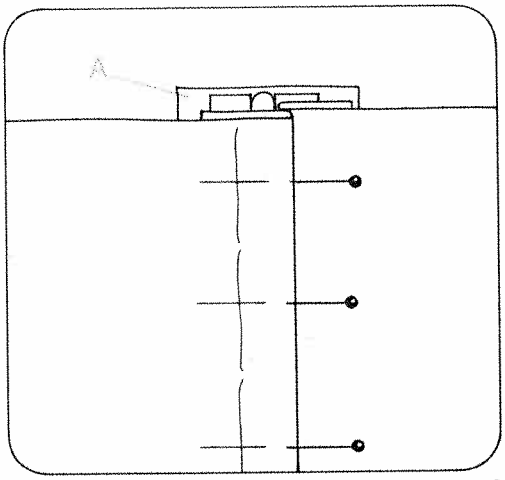

2

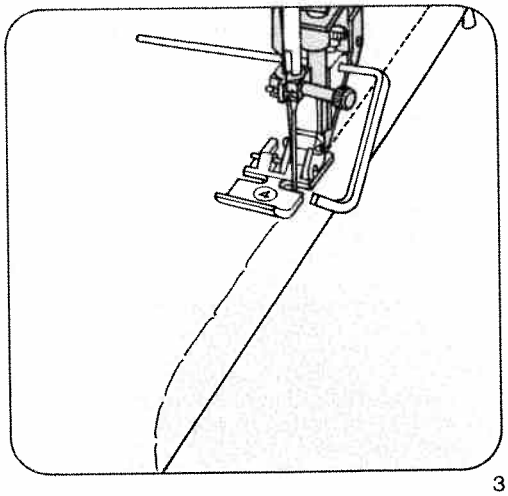

3

Zippers for ladies' slacks

prog			
00		3–5	4

Key: Needle down

- Snap the zipper foot in at the right.

Iron the fly edge. Baste the closed zipper underneath the pressed right-hand fly edge so that its teeth are still visible. Pin facing strip "A" to the underside and stitch it down at the same time as you sew on the zipper. The zipper teeth move along the right-hand guide edge (Fig. 1). Shortly before you reach the end of the seam, leave the needle down in the material, raise the sewing foot and open the zipper. Then lower the foot again and sew the seam to the end. Close the zipper.

Fold the right edge over the left and pin it in place according to the seam line. Then baste in the left zipper chain (Fig. 2).

Open the zipper. Attach the edge guide and adjust it so that its finger moves along the fabric edge (Fig. 3). Shortly before you reach the end of the seam, leave the needle down in the material, raise the sewing foot and close the zipper. Then lower the foot again and sew to the end of the seam. Secure the end of the zipper seam with a tack.

Our sewing tip: If a zipper jams after dry cleaning, rub candle wax or a piece of soap over its teeth. It can then be opened and closed without any effort.

Needle chart

Using the right needle ensures better sewing results.

Fabric weight: **light**	Fabric weight: **medium**	Fabric weight: **heavy**
Needle size: **60, 70, 75**	Needle size: **80, 90**	Needle size: **100, 110, 120**

Needle points

System & No.	Profile	Point & eye	Suitable for
130/705 H 70, 80		Light ball point	Universal needle for fine-meshed synthetics, fine linen, chiffon, batiste, organdy, woolens, velvet, fancy seams and embroidery work.
130/705 H-SUK 70, 110		Medium ball point	Coarse knitted fabrics, Lastex, double-jersey fabrics, Quiana and Simplex.
130/705 H-PS 75, 90	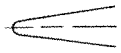	Medium ball point	Stretch-fabric needle developed especially for Pfaff. Particularly suitable for delicate stretch and knitted fabrics.
130/705 H-SKF 70, 110		Heavy ball point	Wide-meshed corsetry, Lycra, Simplex and Lastex.
130/705 H-J 90–110		Acute round point	Twill, workwear, heavy linen, blue jeans and light canvas.
130/705 H-LR 70–120	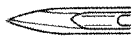	Narrow twist point	Leather, suede, calf and goatskin leathers.
130/705 H-PCL 80–110		Narrow wedge point with left-twist groove	Imitation leathers, plastic materials, plastic sheeting and oilcloth.
130 H-N 70–110	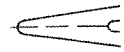	Light ball point, long eye	Seams topstitched with buttonhole silk or No. 30/3 synthetic thread.
130/705 H-WING 100	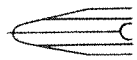	Hemstitching point	Attractive hemstitching on heavily dressed materials, organdy and glass cambric.

edle chart

System & No.	Stitch length	Stitch width	Needle spacing	Suitable for
130/705 H-ZWI 80 80	2.5 mm 2.5 mm	– –	1.6 mm 2.0 mm	Medium wide cording
130/705 H-ZWI 80 90 100	2.5 mm 2.5 mm 3.0 mm	– – –	2.5 mm 3.0 mm 4.0 mm	Wide cording Extra wide cording Extra wide cording

Decorative designs sewn with twin needles
Before you start sewing, turn the handwheel and check to make sure the needles stitch into the fabric properly. In this way, needle breakage can be largely prevented.

Decorative and zigzag patterns

130/705 H-ZWI 80 80 80	0.5–1.5 mm 0.5–1.5 mm 0.5–1.5 mm	wide narrow narrow	1.6 mm 2.0 mm 2.5 mm	Ornamentations Ornamentations Ornamentations

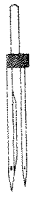

Special hemstitching twin needle

130/705 H-ZWI-Ho 80 100	2.0–3.0 mm 2.0–3.0 mm	very narrow very narrow	– –	Decorative hem stitching effect Heavily dressed fabrics are particularly suitable

PFAFF-HANDELSGESELLSCHAFT
für Haushaltnähmaschinen m.b.H.
7500 Karlsruhe 41 · West Germany

Subject to alterations in design.
Printed in West-Germany
Nr. 30031 engl. · HR 487